Optoma

DLP® Projector

ZU920TST

User's manual

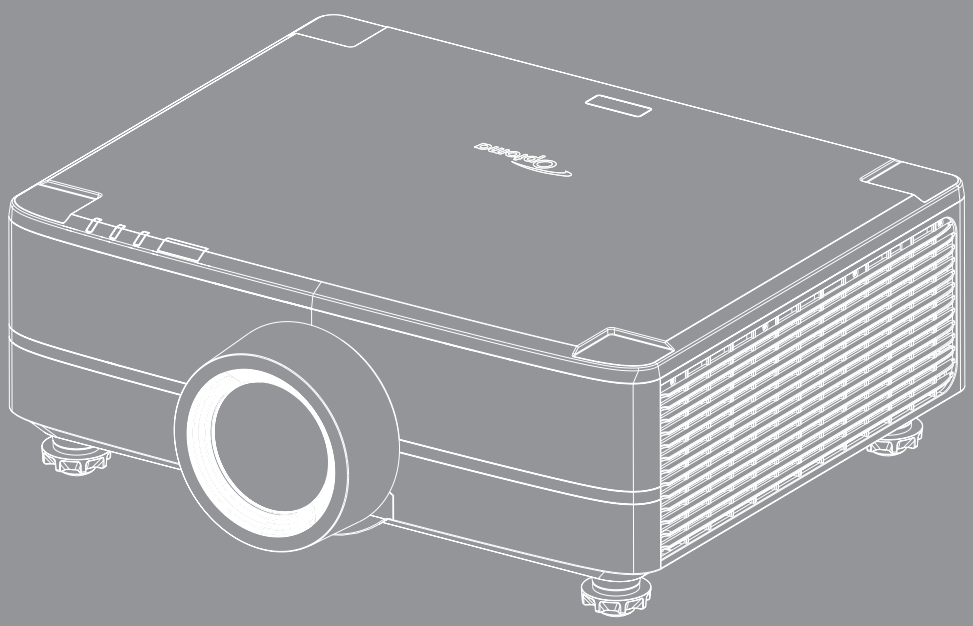

User manual

TABLE OF CONTENTS

SAFETY 4

Important Safety Instruction..... 4
Cleaning the Lens..... 5
Laser Safety Information 6
3D Safety Information..... 7
Copyright 7
Disclaimer..... 7
Trademark Recognition 8
FCC Notice 8
Declaration of Conformity for EU countries 8
WEEE 9

INTRODUCTION 10

Package Overview..... 10
Standard Accessories..... 10
Product Overview 11
Connections..... 12
Keypad 13
Remote control 14

SETUP AND INSTALLATION 16

Connecting Sources to the Projector..... 16
Adjusting the Projector Image 17
Adjusting the Projection Image Shift..... 18
Adjusting the Projector's Zoom and Focus..... 21
Adjusting the Projector Position..... 22
Remote Setup..... 23

USING THE PROJECTOR..... 25

Powering On / Off the Projector..... 25
Menu navigation and features 27
OSD menu tree..... 28
Image menu..... 42
Display menu..... 47
Input Settings menu..... 54
Device Setup menu 55
Communication menu..... 61
Info menu..... 66

ADDITIONAL INFORMATION 67

Compatible Resolutions..... 67
RS232 Port Setting and Signals Connection..... 70
Image Size and Projection Distance..... 71
Ceiling Mount Installation 73
IR remote codes 74
Troubleshooting 76
LED Indicators and Lightning Messages 77
Specifications 78
RS232 protocol function list..... 79
Optoma global offices..... 88

SAFETY

	The lightning flash with arrow head within an equilateral triangle is intended to alert the user to the presence of uninsulated "dangerous voltage" within the product's enclosure that may be of sufficient magnitude to constitute a risk of electric shock to persons.
	The exclamation point within an equilateral triangle is intended to alert the user to the presence of important operating and maintenance (servicing) instructions in the literature accompanying the appliance.

This product is herewith confirmed to comply with the requirements set out in the Council Directives on the Approximation of the laws of the Member States relating to Electromagnetic Compatibility Directive 2004/108/EEC.

Warning

- This product must not be used in residential areas.
- This product may cause interference if used in residential areas.

Such use must be avoided unless the user takes special measures to reduce electromagnetic emissions to prevent interference to the reception of radio and television broadcasts.

Important Safety Instruction

- Do not stare into the beam, RG2.
  As with any bright source, do not stare into the direct beam, RG2 IEC 62471-5:2015.
- Do not block any ventilation openings. To ensure reliable operation of the projector and to protect from overheating, it is recommended to install the projector in a location that does not block ventilation. As an example, do not place the projector on a crowded surface. Do not put the projector in an enclosure such as a book case or a cabinet that restricts air flow.
- To reduce the risk of fire and/or electric shock, do not expose the projector to rain or moisture. Do not install near heat sources such as radiators, heaters, stoves or any other apparatus such as amplifiers that emits heat.
- Do not let objects or liquids enter the projector. They may touch dangerous voltage points and short out parts that could result in fire or electric shock.
- Do not use under the following conditions:
  - In extremely hot, cold or humid environments.
    (i) Ensure that the ambient room temperature is within 5°C ~ 40°C (41°F ~ 104°F)
    (ii) Relative humidity is 10% ~ 85%
  - In areas susceptible to excessive dust and dirt.
  - Near any appliance generating a strong magnetic field.
  - In direct sunlight.
- Do not use the unit if it has been physically damaged or abused. Physical damage/abuse would be (but not limited to):
  - Unit has been dropped.
  - Power supply cord or plug has been damaged.
  - Liquid has been spilled on to the projector.
  - Projector has been exposed to rain or moisture.
  - Something has fallen in the projector or something is loose inside.

- Do not place the projector on an unstable surface. The projector may fall over resulting in injury or the projector may become damaged.
- Do not block the light coming out of the projector lens when in operation. The light will heat the object and could melt, cause burns or start a fire.
- Please do not open or disassemble the projector as this may cause electric shock.
- Do not attempt to service the unit yourself. Opening or removing covers may expose you to dangerous voltages or other hazards. Please call Optoma before you send the unit for repair.
- See projector enclosure for safety related markings.
- The unit should only be repaired by appropriate service personnel.
- Only use attachments/accessories specified by the manufacturer.
- Do not look straight into the projector lens during operation. The bright light may harm your eyes.
- When switching the projector off, please ensure the cooling cycle has been completed before disconnecting power. Allow 90 seconds for the projector to cool down.
- Turn off and unplug the power plug from the AC outlet before cleaning the product.
- Use a soft dry cloth with mild detergent to clean the display housing. Do not use abrasive cleaners, waxes or solvents to clean the unit.
- Disconnect the power plug from the AC outlet if the product will not be used for a long period of time.
- Do not setup the projector in places where it might be subjected to vibration or shock.
- Do not touch the lens with bare hands.
- Remove battery/batteries from remote control before storage. If the battery/batteries are left in the remote for long periods, they may leak.
- Do not use or store the projector in places where smoke from oil or cigarettes may be present, as it can adversely affect the quality of the projector performance.
- Please follow the correct projector orientation installation as non standard installation may affect the projector performance.
- Use a power strip and/or surge protector. As power outages and brown-outs can KILL devices.

Cleaning the Lens

- Before cleaning the lens, be sure to turn off the projector and unplug the power cord to allow it to completely cool down.
- Use a compressed air tank to remove the dust.
- Use a special cloth for cleaning lens and gently wipe the lens. Do not touch the lens with your fingers.
- Do not use alkaline/acid detergents or volatile solvents such as alcohol for cleaning lens. If the lens is damaged due to the cleaning process, it is not covered by the warranty.

Warning

- Do not use a spray containing flammable gases to remove dust or dirt from the lens. This may cause a fire due to excessive heat inside the projector.
- Do not clean the lens if the projector is warming up as this may cause the lens' surface film to peel off.
- Do not wipe or tap the lens with a hard object.
- MOUNT ABOVE THE HEADS OF CHILDREN. The use of a ceiling mount is recommended with this product to place it above the eyes of children.

Laser Safety Information

- Complies with 21 CFR 1040.10 and 1040.11 except for conformance as a Risk Group 2 LIP as defined in IEC 62471-5:Ed. 1.0. For more information see Laser Notice No. 57, dated May 8, 2019. IEC 60825-1:2014: CLASS 1 LASER PRODUCT - RISK GROUP 2

- This projector has built-in Class 4 laser module. Disassembly or modification is very dangerous and should never be attempted.
- Any operation or adjustment not specifically instructed by the user's guide creates the risk of hazardous laser radiation exposure.
- Do not open or disassemble the projector as this may cause damage by the exposure of laser radiation.
- Do not stare into beam when the projector is on. The bright light may result in permanent eye damage.
- When turning on the projector, make sure no one within projection range is looking at the lens.
- Without following the control, adjustment or operation procedure may cause damage by the exposure of laser radiation.
- Adequate instructions for assembly, operation, and maintenance, including clear warnings concerning precautions to avoid possible exposure to laser and collateral radiation in excess of the accessible emission limits in Class 2.
- The Class A digital apparatus meets all requirements of the Canadian Interference-Causing Equipment Regulation. Interference-Causing Equipment Regulation.
- Cet appareil numerique de la class A respecte toutes les exigences du Reglement sur le materiel brouilleur du Canada.
- Notice is given to supervise children and to never allow them to stare into the projector beam at any distance from the projector.
- Notice is given to use caution when using the remote control for starting the projector while in front of the projection lens.
- Notice is given to the user to avoid the use of optical aids such as binoculars or telescopes inside the beam

3D Safety Information

Please follow all warnings and precautions as recommended before you or your child use the 3D function.

Warning

- Children and teenagers may be more susceptible to health issues associated with viewing in 3D and should be closely supervised when viewing these images.

Photosensitive Seizure Warning and Other Health Risks

- Some viewers may experience an epileptic seizure or stroke when exposed to certain flashing images or lights contained in certain Projector pictures or video games. If you suffer from, or have a family history of epilepsy or strokes, please consult with a medical specialist before using the 3D function.
- Even those without a personal or family history of epilepsy or stroke may have an undiagnosed condition that can cause photosensitive epileptic seizures.
- Pregnant women, the elderly, sufferers of serious medical conditions, those who are sleep deprived or under the influence of alcohol should avoid utilizing the unit's 3D functionality.
- If you experience any of the following symptoms, stop viewing 3D pictures immediately and consult a medical specialist: (1) altered vision; (2) lightheadedness; (3) dizziness; (4) involuntary movements such as eye or muscle twitching; (5) confusion; (6) nausea; (7) loss of awareness; (8) convulsions; (9) cramps; and/ or (10) disorientation. Children and teenagers may be more likely than adults to experience these symptoms. Parents should monitor their children and ask whether they are experiencing these symptoms.
- Watching 3D projection may also cause motion sickness, perceptual after effects, disorientation, eye strain and decreased postural stability. It is recommended that users take frequent breaks to lessen the potential of these effects. If your eyes show signs of fatigue or dryness or if you have any of the above symptoms, immediately discontinue use of this device and do not resume using it for at least thirty minutes after the symptoms have subsided.
- Watching 3D projection while sitting too close to the screen for an extended period of time may damage your eyesight. The ideal viewing distance should be at least three times the screen height. It is recommended that the viewer's eyes are level with the screen.
- Watching 3D projection while wearing 3D glasses for an extended period of time may cause a headache or fatigue. If you experience a headache, fatigue or dizziness, stop viewing the 3D projection and rest.
- Do not use the 3D glasses for any other purpose than for watching 3D projection.
- Wearing the 3D glasses for any other purpose (as general spectacles, sunglasses, protective goggles, etc.) may be physically harmful to you and may weaken your eyesight.
- Viewing in 3D projection may cause disorientation for some viewers. Accordingly, DO NOT place your 3D PROJECTOR near open stairwells, cables, balconies, or other objects that can be tripped over, run into, knocked down, broken or fallen over.

Copyright

This publication, including all photographs, illustrations and software, is protected under international copyright laws, with all rights reserved. Neither this manual, nor any of the material contained herein, may be reproduced without written consent of the author.

© Copyright 2022

Disclaimer

The information in this document is subject to change without notice. The manufacturer makes no representations or warranties with respect to the contents hereof and specifically disclaims any implied warranties of merchantability or fitness for any particular purpose. The manufacturer reserves the right to revise this publication and to make changes from time to time in the content hereof without obligation of the manufacturer to notify any person of such revision or changes.

Trademark Recognition

Kensington is a U.S. registered trademark of ACCO Brand Corporation with issued registrations and pending applications in other countries throughout the world.

HDMI, the HDMI Logo, and High-Definition Multimedia Interface are trademarks or registered trademarks of HDMI Licensing LLC in the United States and other countries.

DLP®, DLP Link and the DLP logo are registered trademarks of Texas Instruments and BrilliantColor™ is a trademark of Texas Instruments.

HDBaseT™ and the HDBaseT Alliance logo are trademarks of the HDBaseT Alliance.

All other product names used in this manual are the properties of their respective owners and are Acknowledged.

FCC Notice

This Equipment has been tested and found to comply with the limits for a Class A digital device, pursuant to part 15 of the FCC Rules. These limits are designed to provide reasonable protection against harmful interference when the equipment is operated in a commercial environment. This equipment generates, uses, and can radiate radio frequency energy and, if not installed and used in accordance with the instruction manual, may cause harmful interference to radio communications.

Operation of this equipment in a residential area is likely to cause harmful interference in which case the user will be required to correct the interference at his own expense.

Notice: Shielded cables

All connections to other computing devices must be made using shielded cables to maintain compliance with FCC regulations.

Caution

Changes or modifications not expressly approved by the manufacturer could void the user's authority, which is granted by the Federal Communications Commission, to operate this projector.

Operation Conditions

This device complies with Part 15 of the FCC Rules. Operation is subject to the following two conditions:

1. This device may not cause harmful interference and

2. This device must accept any interference received, including interference that may cause undesired operation.

Notice: Canadian users

This Class A digital apparatus complies with Canadian ICES-003.

Remarque à l'intention des utilisateurs canadiens

Cet appareil numerique de la classe A est conforme a la norme NMB-003 du Canada.

Declaration of Conformity for EU countries

- EMC Directive 2014/30/EC (including amendments)
- Low Voltage Directive 2014/35/EC
- RED 2014/53/EU (if product has RF function)

WEEE

Disposal instructions

Do not throw this electronic device into the trash when discarding. To minimize pollution and ensure utmost protection of the global environment, please recycle it.

CAUTION: This equipment is equipped with a three-pin grounding-type power plug. Do not remove the grounding pin on the power plug. This plug will only fit a grounding-type power outlet. This is a safety feature. If you are unable to insert the plug into the outlet, contact an electrician. Do not defeat the purpose of the grounding plug.

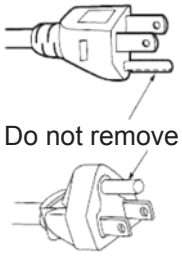

Warning: Do not remove the earthing pin on the mains plugs. This apparatus is equipped with a three prong earthing type mains plug. This plug will only fit an earthing-type mains socket. This is a safety feature. If you are unable to insert the plug into the mains socket, contact an electrician. Do not defeat the purpose of the earthing plug.

INTRODUCTION

Package Overview

Carefully unpack and verify that you have the items listed below under standard accessories. Some of the items under optional accessories may not be available depending on the model, specification and your region of purchase. Please check with your place of purchase. Some accessories may vary from region to region.

The warranty card is only supplied in some specific regions. Please consult your dealer for detailed information.

Standard Accessories

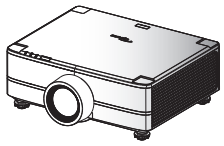

Projector

Remote control

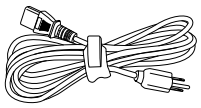

AC power cord

- ☑ Warranty Card(*)
- ☑ Quick Start User Manual

Documentation

Note:

- *The actual remote control may vary depending on the region.*
- *(*) For European warranty Information, please visit www.optoma.com.*

Please scan the OPAM warranty QR code or visit the following URL:
https://www.optoma.com/us/support/warranty-and-return-policy/

Please scan the Asia-Pacific QR code or visit the following URL:
https://www.optoma.com/support/download

INTRODUCTION

Product Overview

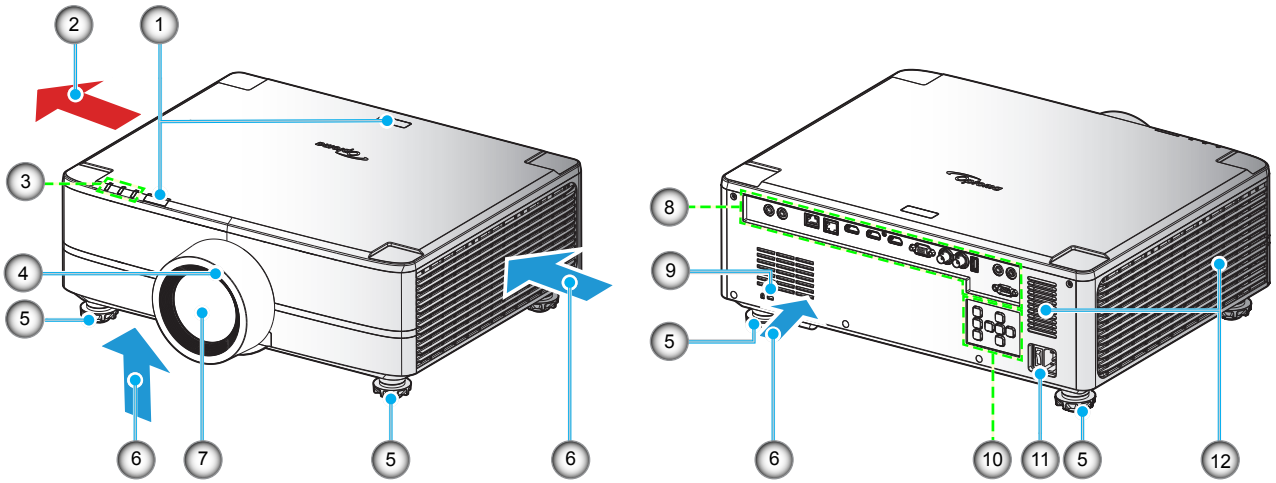

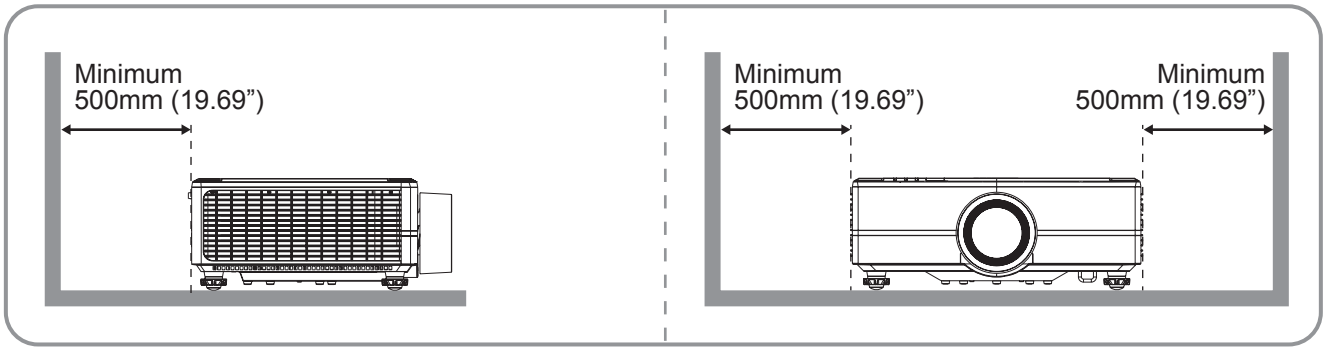

Note:

- *Do not block projector intake and exhaust vents.*
- *When operating the projector in an enclosed space, allow at least 500mm (19.69”) clearance around the intake and exhaust vents.*

No.	Item	No.	Item
1.	IR Receiver	7.	Projection Lens
2.	Ventilation (Outlet)	8.	Input / Output
3.	LED Indicators	9.	Kensington™ Lock Port
4.	Deco Ring (1.6x lens / Fixed lens models)	10.	Control Panel
5.	Tilt-Adjustment Foot	11.	Power Socket / Power Switch
6.	Ventilation (Inlet)	12.	Speakers

INTRODUCTION

Connections

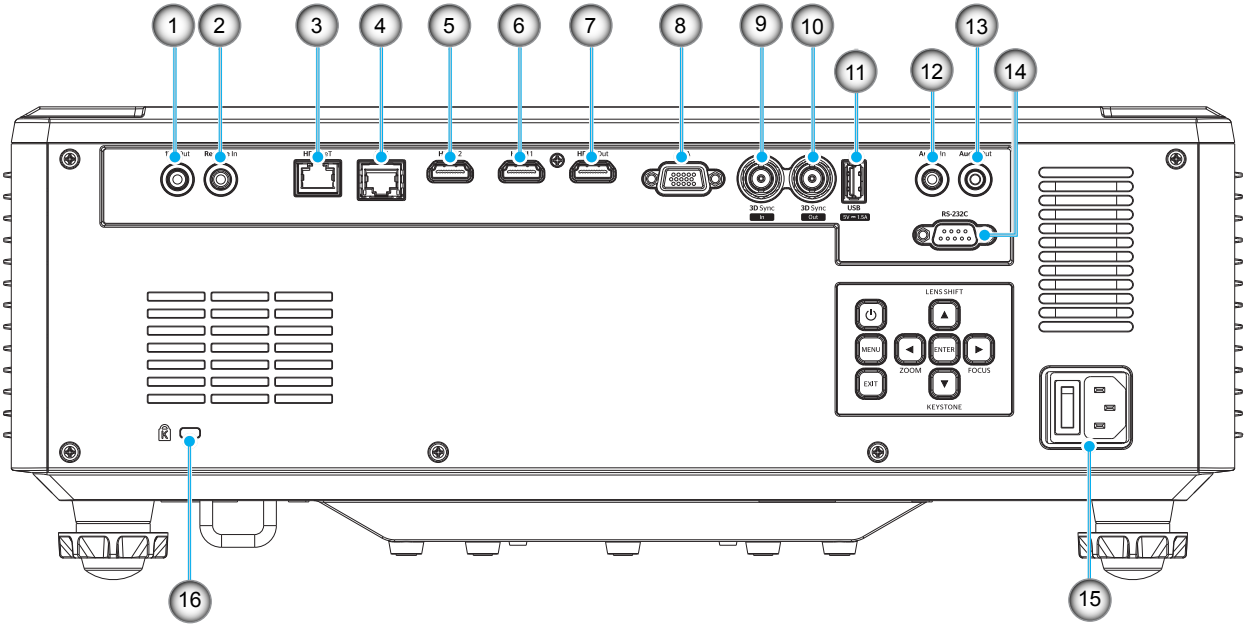

No.	Item	Cable	Example Connections[1]
1.	12V Out Connector	12V Trigger Cable	Motorized screen, Curtain, etc
2.	Remote In Connector	Wired Remote Control Cable or IR Receiver Cable (3.5mm TRS type[2])	RCU
3.	HDBaseT Connector	RJ-45 Cable	Media Play
4.	LAN Connector	RJ-45 Cable	Local or Company Network
5.	HDMI 2 Connector	HDMI Cable	Computer, Game, Console, Media Play
6.	HDMI 1 Connector	HDMI Cable	Computer, Game, Console, Media Play
7.	HDMI Out Connector	HDMI Cable	Screen
8.	VGA Connector	VGA Cable	Computer
9.	3D Sync In Connector	3D Sync Cable	Computer
10.	3D Sync Out Connector	3D Emitter Cable	3D Emitter
11.	USB Connector (Power 5V⎓1.5A)[3]	USB (A to A) Cable	USB Flash Drive
12.	Audio In Connector	Audio In Cable	Media Play
13.	Audio Out Connector	Audio Out Cable	Speaker, Media Play
14.	RS-232C Connector	RS232 Cable	Computer
15.	Power Socket / Power Switch	Power Cord	Projector
16.	Kensington™ Lock Port	Protection Cable	Projector

Note:

1. *These are just a few examples of what you can connect. There may be more options available for each port.*
2. *3.5mm TRS type.*

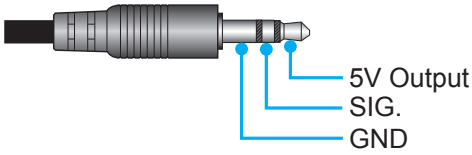

3. *Not recommended for charging a cell phone.*

INTRODUCTION

Keypad

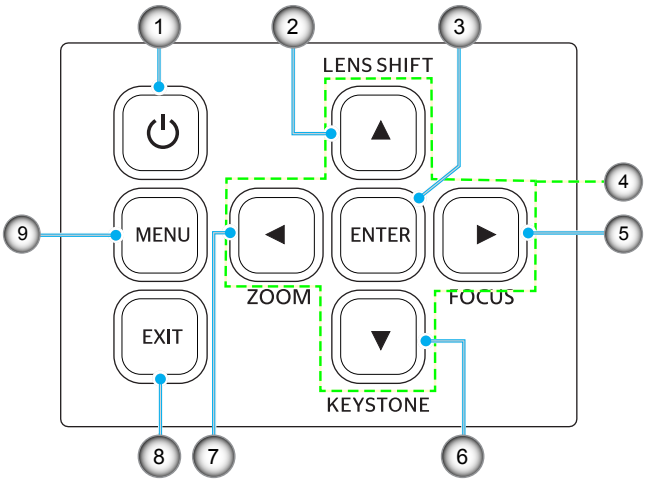

No.	Button	Function
1.	Power Button	Turns the projector on or off.
2.	Lens Shift	Adjust the lens vertical / horizontal position.
3.	Enter	Confirm the settings.
4.	Four Directional Select Keys	Navigation keys.
5.	Focus	Adjust the image focus.
6.	Keystone Correction	Adjust the keystone correction.
7.	Zoom	Adjust the image size.
8.	Exit	Returns to previous menu or exit menu if at top level.
9.	Menu	Shows the main menu on screen.

INTRODUCTION

Remote control

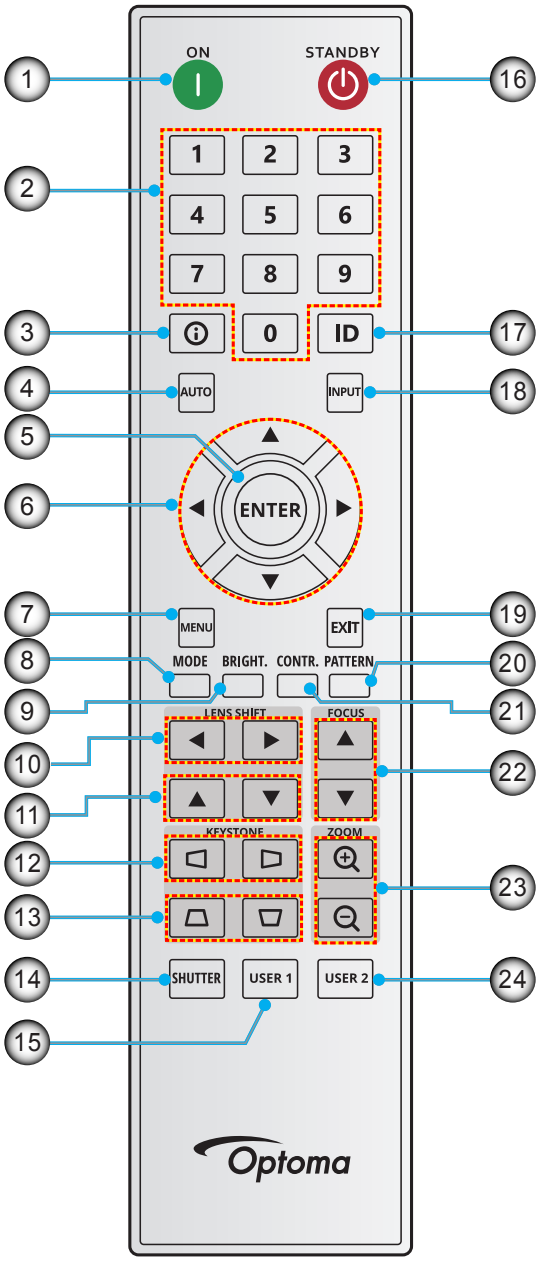

No.	Button	Function
1.	Power On	Turn the projector on.
2.	Number Keys	Input numbers (0-9).
3.	Info	Display information on the screen image.
4.	Auto	Automatically synchronize the projector to an input source.
5.	Enter	Press to confirm the selection.
6.	Arrow Keys	Use arrow keys to navigate through the menu or select the appropriate settings.
7.	Menu	Show the main menu on the screen.
8.	Mode	Press to select the preset display mode.
9.	Brightness	Set the brightness of the image.

INTRODUCTION

No.	Button	Function
10.	Left Shift (Horizontal)	Adjust the image position horizontally.
11.	Left Shift (Vertical)	Adjust the image position vertically.
12.	Keystone (Horizontal)	Adjust a horizontally keystone image.
13.	Keystone (Vertical)	Adjust a vertically keystone image.
14.	Shutter	Momentarily turn off/on the screen (AV Mute).
15.	User 1	Press to assign custom functions. See user guide for more info.
16.	Standby	Turn the projector off.
17.	ID	Set the projector address.
18.	Input	Select an input source manually.
19.	Exit	Back to previous menu.
20.	Pattern	Display test pattern.
21.	Contrast	Set the contrast of the image.
22.	Focus	Adjust the image focus.
23.	Zoom	Adjust the image size.
24.	User 2	Press to assign custom functions. See user guide for more info.

Note: *Some keys may have no function for models that do not support these features.*

SETUP AND INSTALLATION

Connecting Sources to the Projector

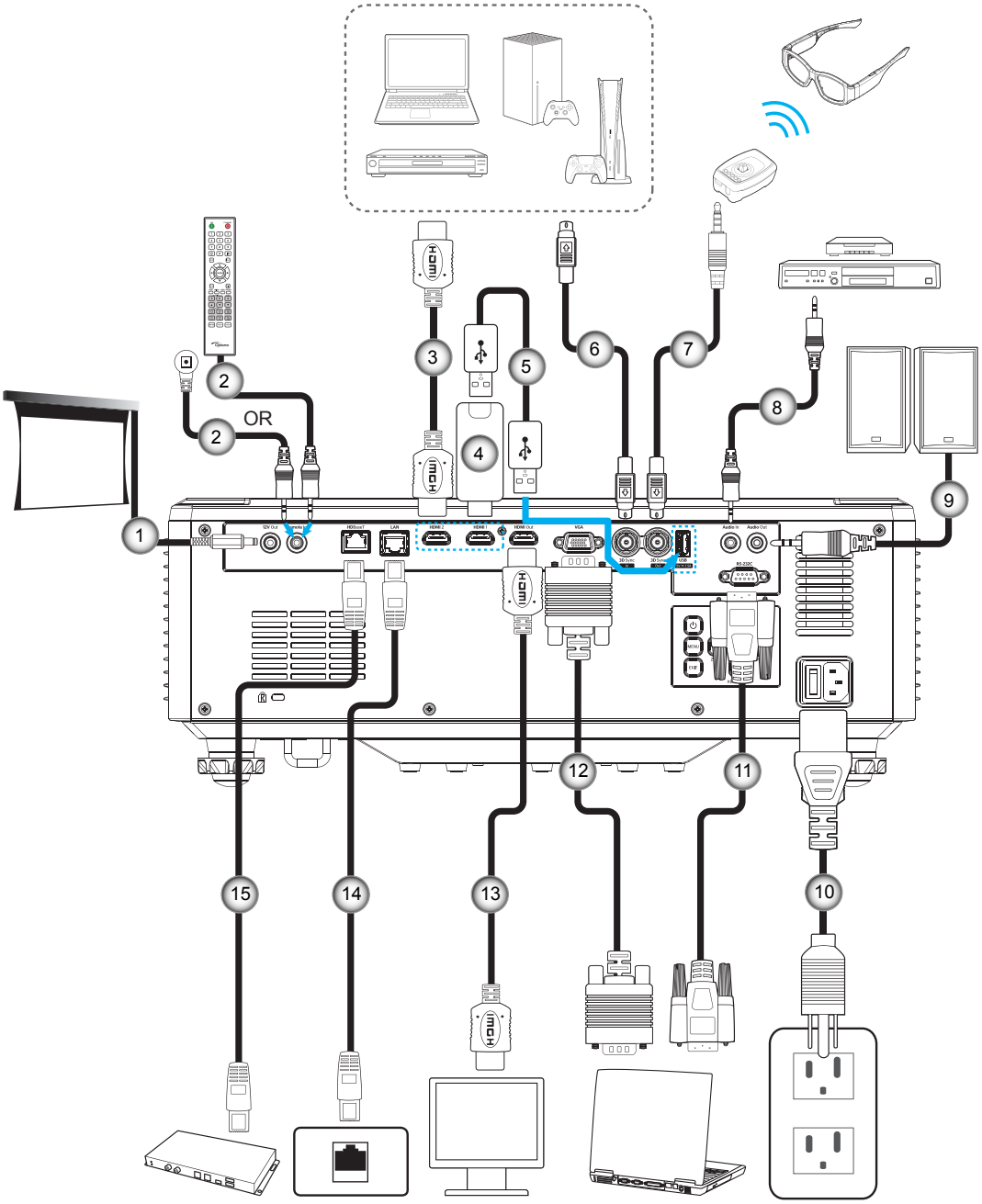

No.	Item	No.	Item	No.	Item
1.	12V DC Jack	6.	3D Sync Cable	11.	RS232 Cable
2.	Wired Remote Control Cable or IR Receiver Cable (3.5mm TRS type)	7.	3D Emitter Cable	12.	VGA Cable
3.	HDMI Cable	8.	Audio In Cable	13.	HDMI Cable
4.	HDMI Dongle	9.	Audio Out Cable	14.	RJ-45 Cable
5.	USB (A to A) Cable	10.	Power Cord	15.	RJ-45 Cable

SETUP AND INSTALLATION

Adjusting the Projector Image

Adjusting the Projector’s Height

The projector is equipped with elevator feet for adjusting the image height.

1. Locate the adjustable foot you wish to adjust on the underside of the projector.
2. Rotate the adjustable foot clockwise or counterclockwise to raise or lower the projector.

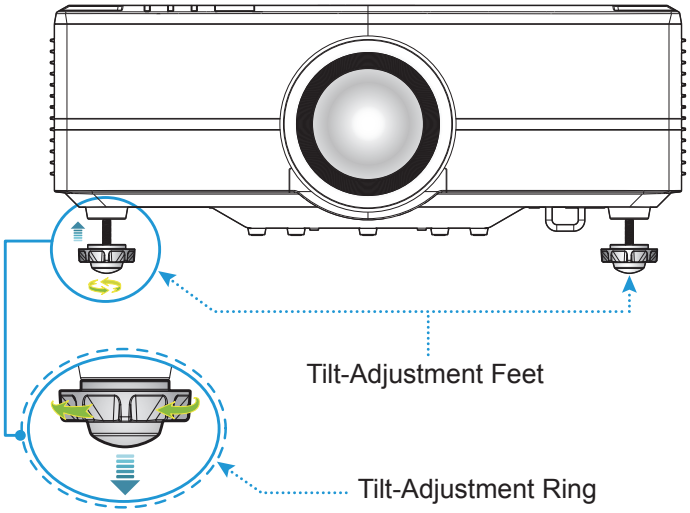

SETUP AND INSTALLATION

Adjusting the Projection Image Shift

The projection lens can be moved up, down, right, and left with the motor-driven lens shift function. This function makes the positioning of images easy on the screen. Lens shift is generally expressed as a percentage of the image height or width, see below illustration.

Vertical / Horizontal Lens Shift

When the lens is shifted to top:

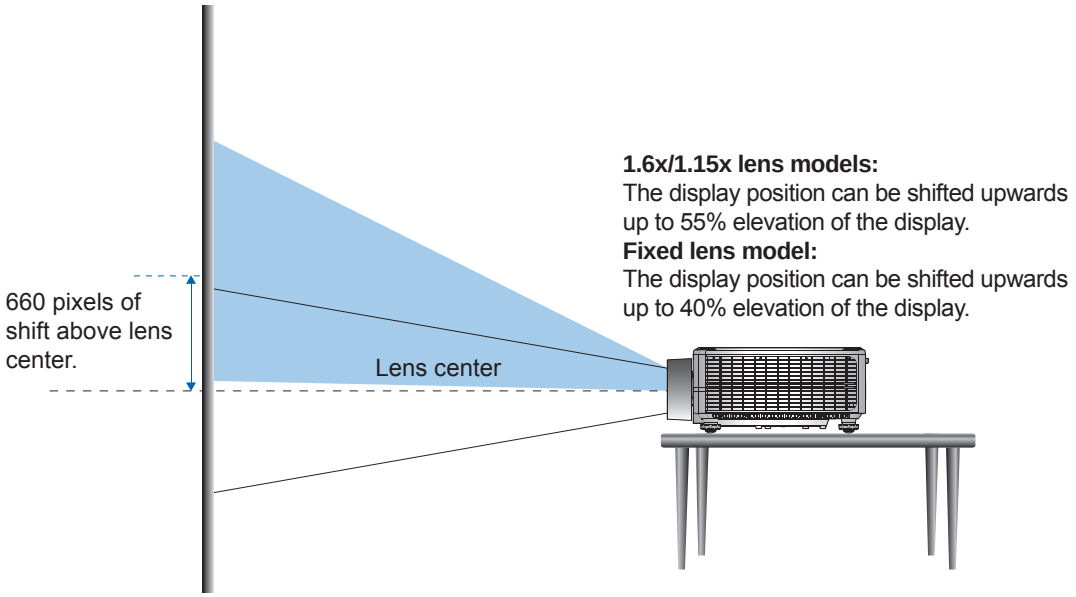

When the lens is shifted to bottom:

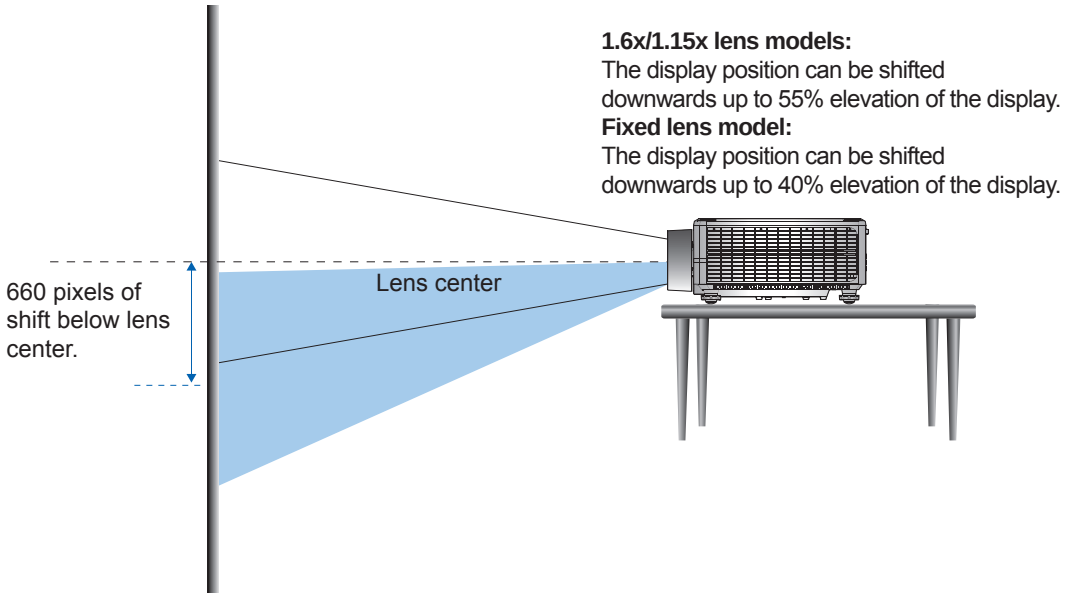

SETUP AND INSTALLATION

When the lens is shifted to the leftmost:

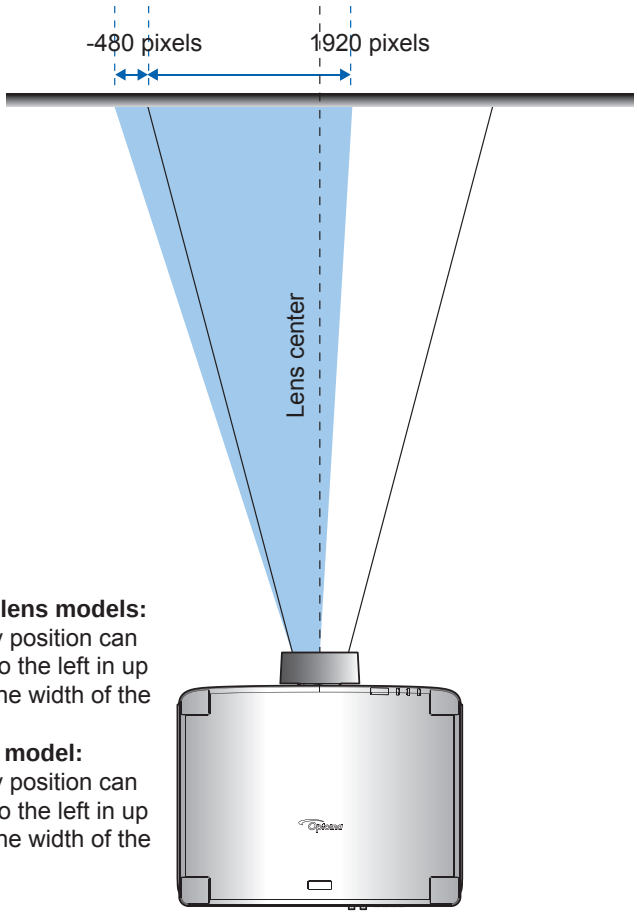

1.6x/1.15x lens models:
The display position can be shifted to the left in up to 25% of the width of the display.
Fixed lens model:
The display position can be shifted to the left in up to 18% of the width of the display.

When the lens is shifted to the rightmost:

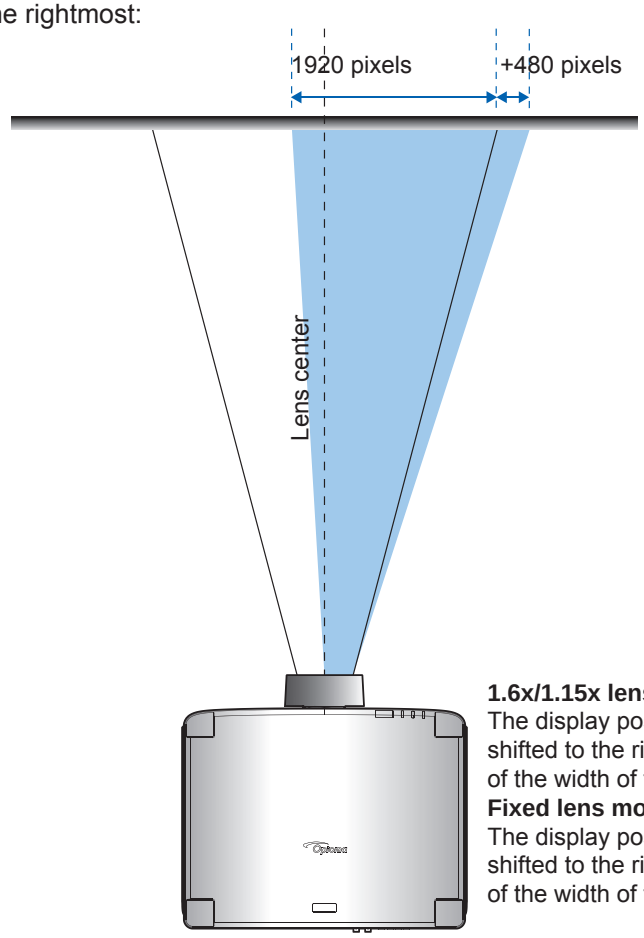

1.6x/1.15x lens models:
The display position can be shifted to the right in up to 25% of the width of the display.
Fixed lens model:
The display position can be shifted to the right in up to 18% of the width of the display.

SETUP AND INSTALLATION

Lens Shift Range

WUXGA	Lens Shift Range (1/2 image)			
	ΔH	ΔV	ΔHo	ΔVo
1.6x/1.15x lens models	50%	110%	10%	30%
Fixed lens model	36%	80%	0%	0%

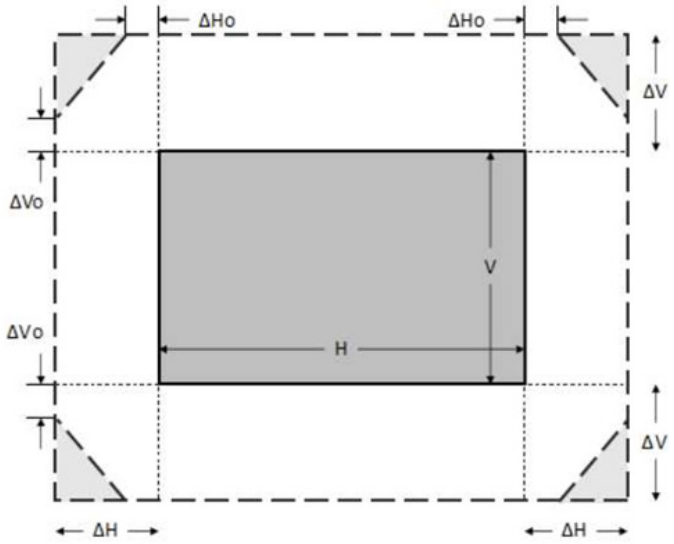

Note:

a) *ΔH: The lens shift range in horizontal direction when the lens is at the center.*

b) *ΔV: The lens shift range in vertical direction when the lens is at the center.*

c) *ΔH0:The lens shift range without vignetting in horizontal direction when the lens is at the top center or the bottom center.*

d) *ΔV0:The lens shift range without vignetting in vertical direction when the lens is at the middle right or the middle left.*

SETUP AND INSTALLATION

Adjusting the Projector's Zoom and Focus

Use the remote control or projector keypad to adjust the zoom and focus of the projected image.

- To adjust the image focus, press **Focus** and the ▲▼ buttons until the image is sharp and legible. (A)
- To adjust the image size, press **Zoom** and the ⊕ ⊖ buttons on the remote control or ◀▶ on the keypad to get the required image size. (B)

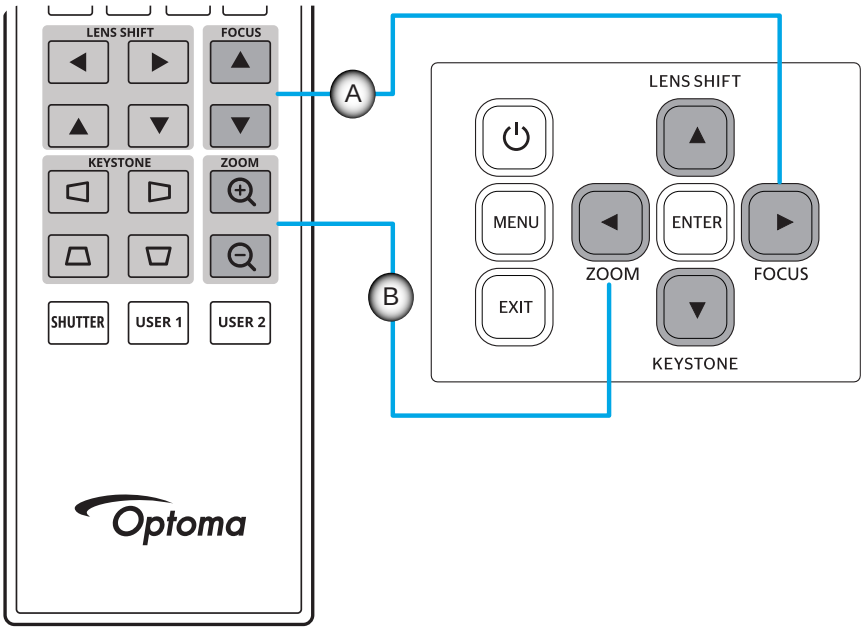

SETUP AND INSTALLATION

Adjusting the Projector Position

When you select a position for the projector, consider the size and shape of your screen, the location of your power outlets, and the distance between the projector and the rest of your equipment.

Follow these general guidelines:

- Position the projector on a flat surface at a right angle to the screen. The 1.6x/1.15x lens models projector (with the standard lens) must be at least 60 inch (1.52m) from the projection screen. The fixed lens model projector (with the standard lens) must be at least 40 inch (1.02m) from the projection screen.
- Position the projector to the desired distance from the screen. The distance from the lens of the projector to the screen, the zoom setting, and the video format determine the size of the projected image.
- Lens throw ratio:
  1.6x lens model:1.25 ~ 2.0
  1.15x lens model: 0.65 ~ 0.75
  Fixed lens model: 0.63
  360 degrees free orientation operation.

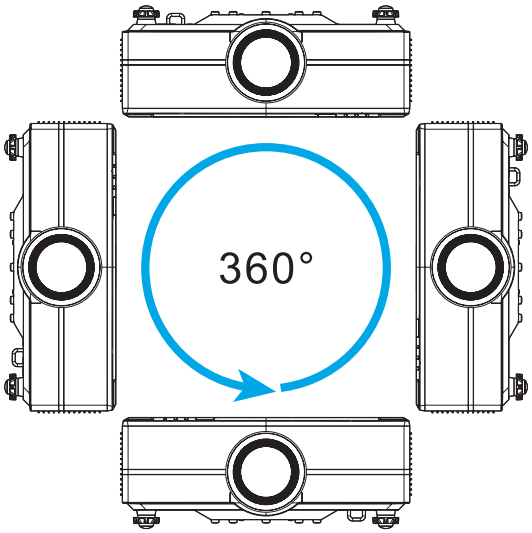

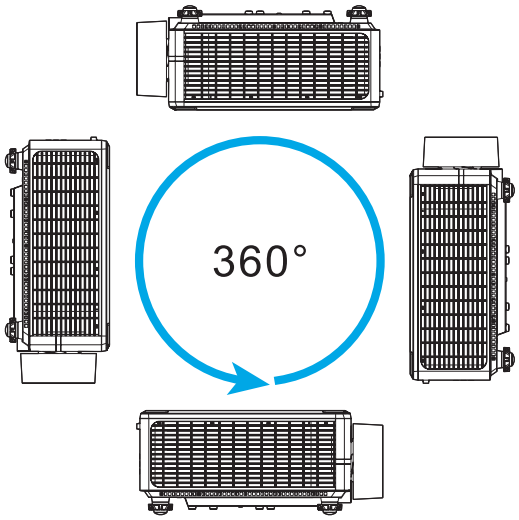

- When installing multiple projectors, keep at least 1000mm (39.4”) space between the adjacent projectors.
- For ceiling/wall mount installations, make sure to leave 15 mm (0.6”) between the ceiling mount and the bottom intake vents of the projector.

SETUP AND INSTALLATION

Remote Setup

Install / Replacing Remote Control Batteries

Two AAA size batteries are supplied for the remote control.

1. Remove the battery cover on the back of the remote control.
2. Insert AAA batteries in the battery compartment as illustrated.
3. Replace back cover on remote control.

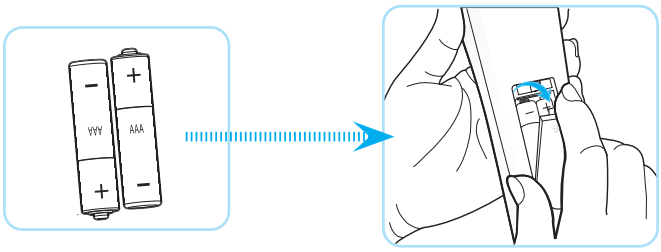

Note: *Replace only with the same or equivalent type batteries.*

CAUTION

Improper use of batteries can result in chemical leakage or explosion. Be sure to follow the instructions below.

- Do not mix batteries of different types. Different types of batteries have different characteristics.
- Do not mix old and new batteries. Mixing old and new batteries can shorten the life of new batteries or cause chemical leakage in old batteries.
- Remove batteries as soon as the are depleted. Chemicals that leak from batteries that come in contact with skin can cause a rash. If you find any chemical leakage, wipe thoroughly with a cloth.
- The batteries supplied with this product may have a shorter life expectancy due to storage conditions.
- If you will not be using the remote control for an extended period of time, remove the batteries.
- When you dispose of the batteries, you must obey the law in the relative area or country.

SETUP AND INSTALLATION

Remote Control Effective Range

Infra-Red (IR) remote control sensor is located on the top and front sides of the projector. Ensure to hold the remote control at an angle within 30 degrees perpendicular to the projector's IR remote control sensor to function correctly. The distance between the remote control and the sensor should not be longer than 20 meters (65.6 feet) when holding not longer than 30 meters (98.4 feet) when aiming the sensor at 0°.

- Make sure that there are no obstacles between the remote control and the IR sensor on the projector that might obstruct the infra-red beam.
- Make sure the IR transmitter of the remote control is not being shined by sunlight or fluorescent lamps directly.
- Please keep the remote controller away from fluorescent lamps for over 2 m or the remote controller might become malfunction.
- If the remote control is close to Inverter-Type fluorescent lamps, it might become ineffective from time to time.
- If the remote control and the projector are within a very short distance, the remote control might become ineffective.
- When you aim at the screen, the effective distance is less than 5 m from the remote control to the screen and reflecting the IR beams back to the projector. However, the effective range might change according to screens.

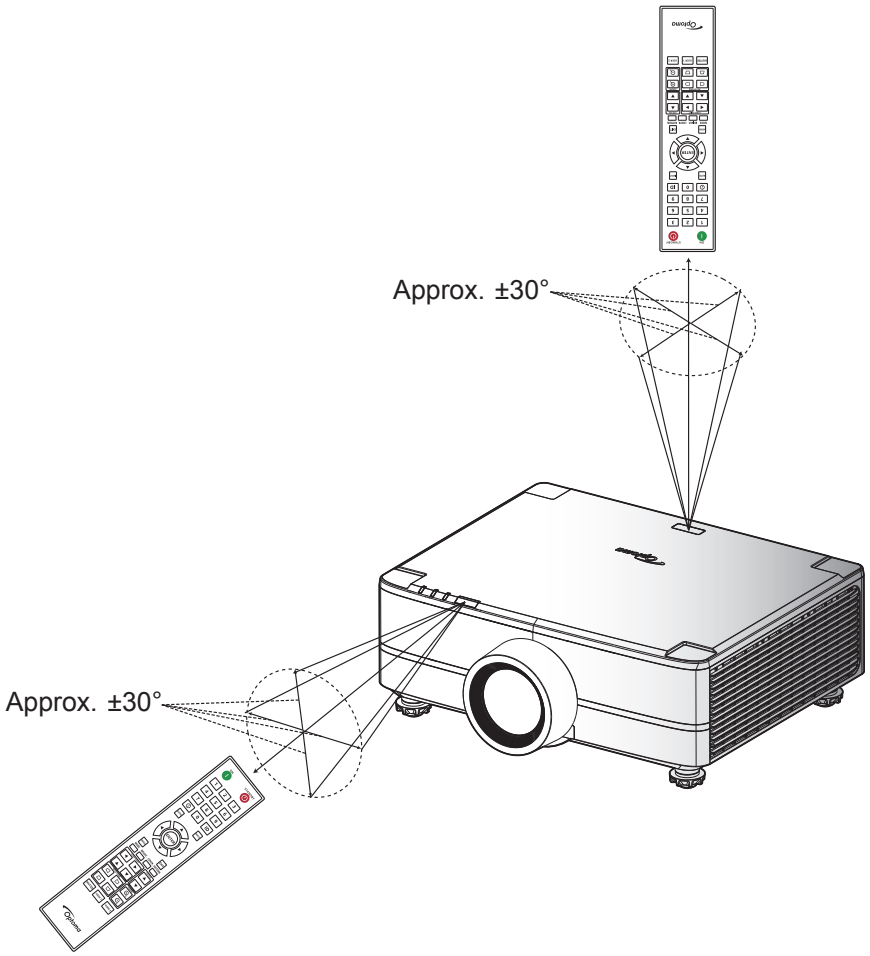

USING THE PROJECTOR

Powering On / Off the Projector

Powering On

1. Securely connect the power lead and signal/source cable. When connected, the power LED will turn red.
2. Set the power switch to the " I " (On) position and wait until the "⏻" button on the projector keypad is solid red.

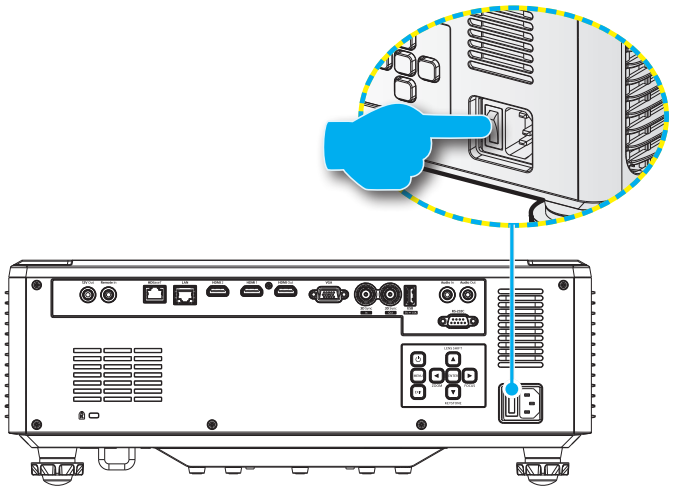

3. Turn on the projector by pressing the "⏻" button on the projector keypad or remote control.

   During startup the power LED is flashing red and during normal operation, the power LED is solid green.

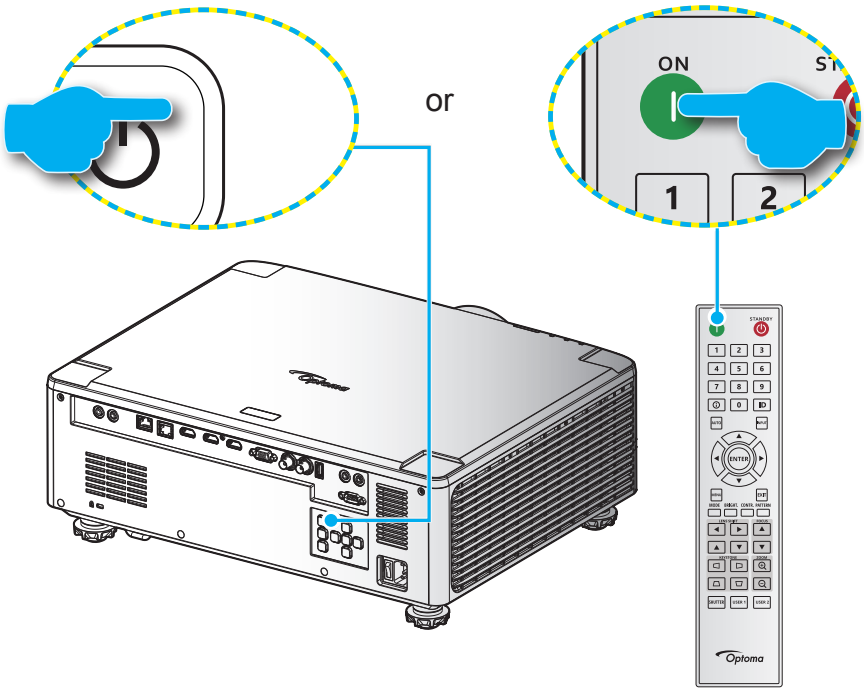

USING THE PROJECTOR

Powering Off

1. Turn off the projector by pressing the "⏻" button on the projector keypad or the ❙ button on the remote control. The following message will be displayed:

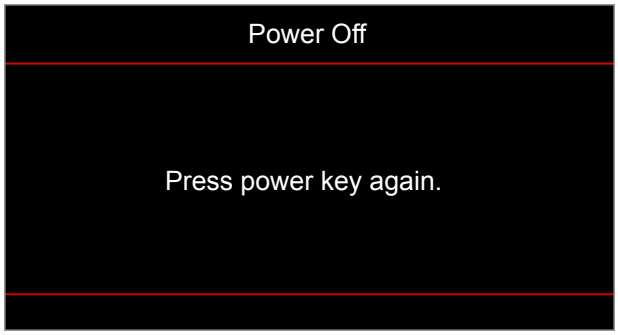

2. Press the ⏻ or ❙ button again to confirm, otherwise the message will disappear after 15 seconds. When you press the ⏻ or ❙ button for the second time, the projector will shut down.
3. During the cooling cycle, the power LED is flashing green. When the power LED turns solid red, this indicates the projector has entered standby mode. If you wish to turn the projector back on, you must wait until the cooling cycle has finished and the projector has entered standby mode. When the projector is in standby mode, simply press the "⏻" button on the projector or the remote control again to turn on the projector.
4. Disconnect the power cord from the electrical outlet and the projector.

Note:

- *It is not recommended that the projector is turned on immediately, right after a power off procedure.*
- *By default, the projector turns off automatically after 20 minutes of inactivity. You can modify the idle time length in "Auto Power off (min.)" menu in "System Settings → Power". If you want the projector to enter standby mode instead, disable auto power off and set the sleep time interval in "System Settings → Power →Sleep Timer (min.)".*

USING THE PROJECTOR

Menu navigation and features

The projector has multilingual on-screen display (OSD) menus that allow you to make image adjustments and change a variety of settings.

1. To open the OSD menu, press the **Menu** key on the remote control or projector keypad.
2. To select a main menu or sub menu, use the ▲▼ buttons to highlight it. Then, press the **Enter** button to enter the sub menu.
3. Press the **Exit** button to return to the previous menu or exit the OSD menu if at top level.
4. Setting methods to adjust the function value or selection an option.
   - To adjust the slide bar values, highlight the function, and use the ◀▶ buttons to change value.
   - To check or uncheck a checkbox, highlight the function, and press **Enter**.
   - To input a number or symbol, highlight the number or symbol, and use the ▲ ▼ buttons to make a selection. You can also use the number keys on the remote control or keypad.
   - To select a function option, use the ▲▼◀▶ buttons to make the selection. If no **Enter** icon shows at the navigation bar, the highlighted option is automatically applied. If there is an **Enter** icon at the navigation bar, press **Enter** to confirm your selection.

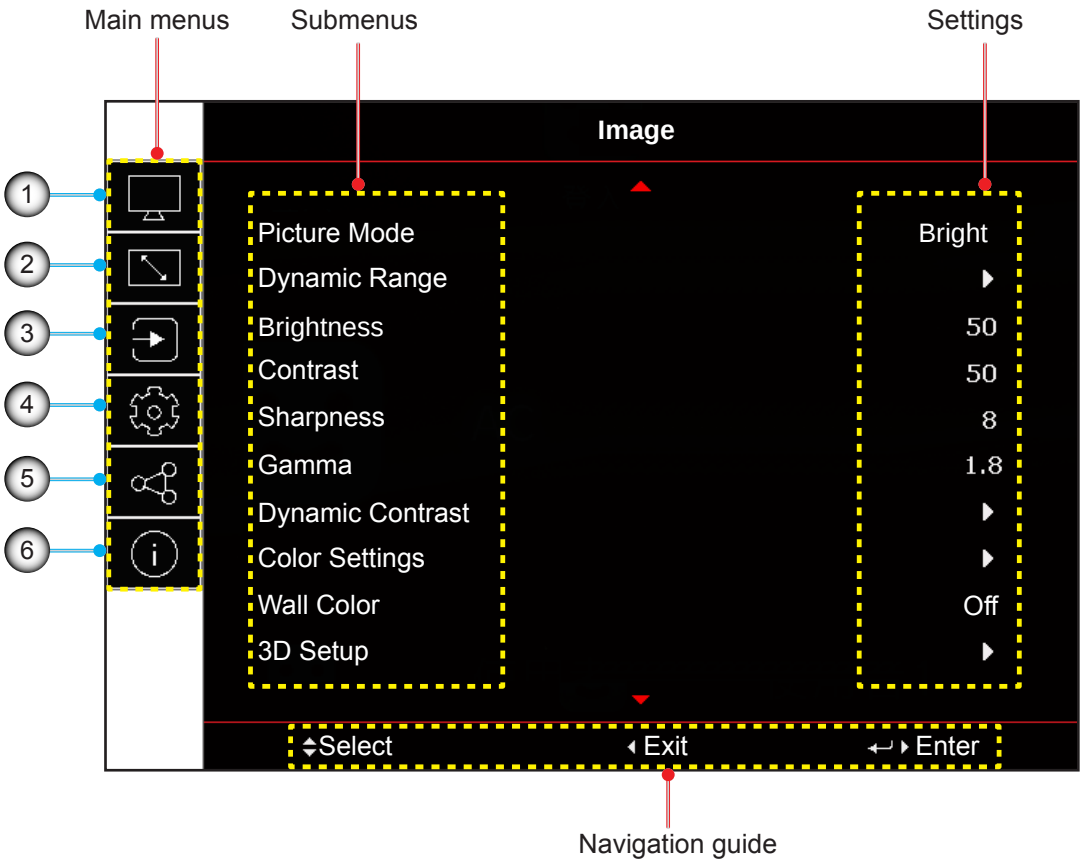

No	Item	No	Item
1.	Image menu	4.	Device setup menu
2.	Display menu	5.	Communication menu
3.	Input settings menu	6.	Information menu

OSD menu tree

Main Menu	Sub Menu 2	Sub Menu 3	Sub Menu 4	Sub Menu 5	Sub Menu 6	Values
Image	Picture Mode					Presentation
						Bright [default]
						Cinema
						HDR
						sRGB
						DICOM SIM.
						Blending
						3D
						2D High Speed
						User
	Dynamic Range	HDR				Off
						Auto [default]
		HDR Picture Mode				Bright
						Standard [default]
						Film
						Detail
	Brightness					0~100 [default: 50]
	Contrast					0~100 [default: 50]
	Sharpness					1~15 [default: 10]
	Gamma					Film
						Graphics
						Standard(2.2)
						Vivid
						3D
						Blackboard
						DICOM SIM.
						1.8
						2.0
						2.4
						2.6
	Dynamic Contrast	Dynamic Black				Off [default]
						On
		Speed				1~15 [default: 1]
		Strength				0~3 [default: 2]
		Level				50%~100% [default: 100%]
		Extreme Black				Off [default]
						On
		AV Mute Timer				0s~10s [default: 0s]
		Black Signal Level				0~5 [default: 0]

Main Menu	Sub Menu 2	Sub Menu 3	Sub Menu 4	Sub Menu 5	Sub Menu 6	Values
Image	Color Settings	Color				0~100 [default: 60]
		Tint				0~100 [default: 50]
		Color Temperature				Warm
						Standard [default]
						Cool
		Color Wheel Speed				2X
						3X [default]
		White Balance	Red Gain			0-100 [default: 50]
			Green Gain			0-100 [default: 50]
			Blue Gain			0-100 [default: 50]
			Red Offset			0-100 [default: 50]
			Green Offset			0-100 [default: 50]
			Blue Offset			0-100 [default: 50]
		White Enhancement				0~10 [default: 10]
		Color Space				Auto [default]
						RGB (0-255)
						RGB (16-235)
						REC709
						REC601
		Color Matching	Auto Test Pattern			Off
						On [default]
			Red	Hue		0~254 [default: 127]
				Saturation		0~254 [default: 127]
				Luminance		0~254 [default: 127]
			Green	Hue		0~254 [default: 127]
				Saturation		0~254 [default: 127]
				Luminance		0~254 [default: 127]
			Blue	Hue		0~254 [default: 127]
				Saturation		0~254 [default: 127]
				Luminance		0~254 [default: 127]
			Cyan	Hue		0~254 [default: 127]
				Saturation		0~254 [default: 127]
				Luminance		0~254 [default: 127]
			Magenta	Hue		0~254 [default: 127]
				Saturation		0~254 [default: 127]
				Luminance		0~254 [default: 127]
			Yellow	Hue		0~254 [default: 127]
				Saturation		0~254 [default: 127]
				Luminance		0~254 [default: 127]
			White	Red		0~254 [default: 127]
				Green		0~254 [default: 127]
				Blue		0~254 [default: 127]
			Reset			Yes
						Cancel [default]

Main Menu	Sub Menu 2	Sub Menu 3	Sub Menu 4	Sub Menu 5	Sub Menu 6	Values
Image	Wall Color					Off [default]
						Blackboard
						Light Yellow
						Light Green
						Light Blue
						Pink
						Gray
	3D Setup	3D Mode				Off
						Active 3D [default]
		3D Format				Auto [default]
						Frame Packing
						Side by Side
						Top and Bottom
						Frame Sequential
		3D Tech				DLP-link
						3D Sync [default]
		3D-2D				3D [default]
						L
						R
		3D Sync Out				To Emitter [default]
						To Next Projector
		3D Invert				Off [default]
						On
		Frame Delay				1~200 [default: 1]
		Reset				Yes
						Cancel [default]
	Save to User					Yes
						Cancel [default]
	Apply to User					User-Presentation
						User-Bright [default]
						User-Cinema
						User-HDR
						User-sRGB
						User-DICOM SIM.
						User-Blending
						User-3D
						User-2D High Speed
	Reset					Yes
						Cancel [default]

Main Menu	Sub Menu 2	Sub Menu 3	Sub Menu 4	Sub Menu 5	Sub Menu 6	Values
Display	Aspect Ratio					Auto [default]
						4:3
						16:9
						16:10
						LBX
						Native
	Digital Zoom	Proportional				Off [default]
						On
		Horizontal				50%~400% [default: 100]
		Vertical				50%~400% [default: 100]
		Horizontal Shift				0~100 [default: 50]
		Vertical Shift				0~100 [default: 50]
		Reset				Yes
						Cancel [default]
	Image Shift	H. Position				0~100 [default: 50]
		V. Position				0~100 [default: 50]
		Reset				Yes
						Cancel [default]
	Geometric Correction	Warp Control				Basic [default]
						Advanced
						AP
		Basic Warp	Keystone	Horizontal		0~40 [default: 20]
				Vertical		0~40 [default: 20]
			Pincushion	Horizontal		0~100 [default: 50]
				Vertical		0~100 [default: 50]
			4-Corner	Top Left		
				Top Right		
				Bottom Left		
				Bottom Right		
		Advanced Warp	Grid Color			Green [default]
						Magenta
						Red
						Cyan
			Grid Background			Black [default]
						Transparent
			Warp Setting	Grid Points		2x2 [default]
						3x3
						5x5
						9x9
						17x17
				Warp Inner		Off [default]
						On
				Warp Sharpness		0~9 [default: 9]
			Blend Setting	Blend Width		[default: 0]
				Overlap Grid Number		4 [default] / 6 / 8 / 10 / 12
				Gamma		1.8 /1.9 /2.0 /2.1 /2.2 [default] /2.3 /2.4

Main Menu	Sub Menu 2	Sub Menu 3	Sub Menu 4	Sub Menu 5	Sub Menu 6	Values
Display	Geometric Correction	Advanced Warp	Black Level	Area		Bottom [default]
						Top
				Enable		Off [default]
						On
				Edit Area		
				Add Point		
				Remove Point		
				Brightness	Brightness	
					Red	0~255 [default: 20]
					Green	0~255 [default: 20]
					Blue	0~255 [default: 20]
					Exit	
				Red		0~255 [default: 20]
				Green		0~255 [default: 20]
				Blue		0~255 [default: 20]
				Reset	Bottom	Yes
						Cancel [default]
					Top	Yes
						Cancel [default]
					All	Yes
						Cancel [default]
		Memory	Save Memory			Memory 1 [default] ~Memory 5
			Apply Memory			Memory 1 [default] ~Memory 5
			Clear Memory			Yes
						Cancel [default]
		Reset				Yes
						Cancel [default]
	Edge Mask					0~10 [default: 0]
	Freeze Screen					Unfreeze [default]
						Freeze
	Test Pattern					Off [default]
						Green Grid
						Magenta Grid
						White Grid
						White
						Black
						Red
						Green
						Blue
						Yellow
						Magenta
						Cyan
						ANSI Contrast 4x4
						Color bar
						Full screen

Main Menu	Sub Menu 2	Sub Menu 3	Sub Menu 4	Sub Menu 5	Sub Menu 6	Values
Display	PIP/PBP	Screen				Off [default]
						PIP
						PBP
		Main Source				VGA
						HDMI1
						HDMI2
						HDBaseT
		Sub Source				VGA
						HDMI1
						HDMI2
						HDBaseT
		Swap				Swap
		Size				Small [default]
						Medium
						Large
		Location				PBP, Main Left [default]
						PBP, Main Top
						PBP, Main Right
						PBP, Main Bottom
						PIP, Bottom Right [default]
						PIP, Bottom Left
						PIP, Top Left
						PIP, Top Right
	Reset					Yes
						Cancel [default]
Input Settings	Auto Source					Off
						On [default]
	Quick Resync					Off
						On [default]
	Active Inputs					VGA [default]
						HDMI1
						HDMI2
						HDBaseT
	Latency Adjustment					Normal [default]
						2D Ultra
	VGA	Phase				0 ~ 100 [default: 50]
		Resolution				[read only]
	HDMI	Output				HDMI 1 [default]
						HDMI 2
		HDMI 1 EDID				1.4
						2.0 [default]
		HDMI 2 EDID				1.4
						2.0 [default]
	Reset					Yes
						Cancel [default]

USING THE PROJECTOR

Main Menu	Sub Menu 2	Sub Menu 3	Sub Menu 4	Sub Menu 5	Sub Menu 6	Values
Device Setup	Language					English [default]
						Deutsch
						Français
						Italiano
						Español
						Português
						Polski
						Nederlands
						Norsk
						繁體中文
						簡体中文
						日本語
						한국어
						Русский
						Magyar
						ไทย
	Projection	Ceiling				Auto [default]
						On
						Off
		Rear				Off [default]
						On
	Lens Settings	Focus				[Focus for adjust]
		Zoom				[Zoom for adjust]
		Lens Shift				[Pattern for adjust]
		Lens Shift Memory	Save Memory			Memory 1~Memory 5
			Apply Memory			Memory 1~Memory 5
			Clear Memory			Yes
						Cancel [default]
		Lens Calibration				Yes
						Cancel [default]
		Lens Lock				Lock
						Unlock [default]
		Reset				Yes
						Cancel [default]
	Schedule	Date and Time				Read Only
		Schedule Mode				Off [default]
						On
		View Today				Monday / Tuesday / Wednesday / Thursday / Friday / Saturday / Sunday [Read only]

Main Menu	Sub Menu 2	Sub Menu 3	Sub Menu 4	Sub Menu 5	Sub Menu 6	Values
Device Setup	Schedule	Monday / Tuesday / Wednesday / Thursday / Friday / Saturday / Sunday	Schedule Enable			Off [default]
						On
			Event 01-08 Event 09-16	Time		00:00 ~ 23:59
				Function		Off [default] / Power Settings / Input Source / Light Source Mode / Shutter
				Event		Off [Function = Off]
				(Function = Power Settings)		Power On [Function = Power Settings] / Eco / Active / Communication
				(Function = Input Source)		VGA [Function = Input Source] / HDMI1 / HDMI2 / HDBaseT
				(Function = Light Source Mode)		Normal Mode [Function = Light Source Mode] / Eco Mode / Custom Brightness
				(Function = Shutter)		Shutter On [Function = Shutter] / Shutter Off
				Reset		Yes
						Cancel [default]
			Copy Events To			Monday / Tuesday / Wednesday / Thursday / Friday / Saturday / Sunday
			Reset the Day			Yes
						Cancel [default]
		Reset Schedule				Yes
						Cancel [default]
	Date and Time	Clock Mode				Use NTP Server [default]
						Manual
		Date				2000 ~ 2037 (Year) [default: 2020]
						01 ~ 12 (Month) [default: 1]
						01 ~ 31 (Day)[default: 1]
		Time				00 ~ 23 (Hour) [default: 0]
						00 ~ 59 (Minute) [default: 0]
		Daylight Saving Time				Off [default]
						On
		NTP Server				time.google.com [default]
						asia.pool.ntp.org
						europe.pool.ntp.org
						north-america.pool.ntp.org
		Time Zone				[default: UTC+00:00]
		Update Interval				Hourly [default]
						Daily
		Apply				Yes
						Cancel [default]

Main Menu	Sub Menu 2	Sub Menu 3	Sub Menu 4	Sub Menu 5	Sub Menu 6	Values
Device Setup	Power Settings	Power Mode (Standby)				Eco
						Active
						Communication [default]
		Signal Power On				Off [default]
						On
		Auto Power Off				0 ~ 180m [default: 0m]
		Sleep Timer				0 ~ 16h [default: 0h]
		12V Trigger				Off [default]
						On
		Reset				Yes
						Cancel [default]
	Light Source Settings	Light Source Mode				Normal [default]
						Eco Mode
						Custom Power
		Custom Brightness	Brightness Level			30% ~ 100% [default: 100%]
			Constant Brightness			Off [default]
						On
	Shutter	Fade-In				0.5 ~ 5s [default: 0.5s]
		Fade-Out				0.5 ~ 5s [default: 0.5s]
		Startup				Shutter Off [default]
						Shutter On
	Audio	Mute				Off [default]
						On
		Volume				0 ~ 10 [default: 5]
	Security	Security				Off [default]
						On
		Security Timer	Month			0 ~ 35 [default: 0]
			Day			0 ~ 29 [default: 0]
			Hour			0 ~ 23 [default: 0]
		Change Password				
	On Screen Display	Menu Location				Top Left
						Top Right
						Center [default]
						Bottom Left
						Bottom Right
		Menu Transparency				0 ~ 9 [default: 0]
		Menu Timer				Off
						5s
						10s
						15s [default]
						30s
						60s
		Information Hide				Off [default]
						On
		Background				Blue
						Black
						White
						Logo [default]

Main Menu	Sub Menu 2	Sub Menu 3	Sub Menu 4	Sub Menu 5	Sub Menu 6	Values
Device Setup	Logo Setup	Change Logo				Default Logo [default]
						Neutral
						User Logo
						Captured Logo
		Logo Capture				Yes
						Cancel [default]
		Delete Logo	Captured Logo			Yes
						Cancel [default]
			User Logo			Yes
						Cancel [default]
	High Altitude					Off [default]
						On
	User Data	Save all settings				Memory 1 [default] ~ Memory 5
		Load all settings				Memory 1 [default] ~ Memory 5
	System Update	Auto				Off [default]
						On
		Auto Download				Off
						On [default]
		Update				Cancel [default]
						Yes
	Reset	Reset OSD				Yes
						Cancel [default]
		Reset to default				Yes
						Cancel [default]
		Reset Selective	Image			Yes
						Cancel [default]
			Display			Yes
						Cancel [default]
			Input			Yes
						Cancel [default]
			Communication			Yes
						Cancel [default]
			Setup			Yes
						Cancel [default]
Communi-cation	Projector ID					0 ~ 99 [default: 0]
	Remote Setup	Remote Code				0 ~ 99 [default: 0]
		Quick Switch Code				Off [default]
						1 ~ 9
		IR Function	Front			Off
						On [default]
			Top			Off
						On [default]
			HDBaseT			Off [default]
						On

Main Menu	Sub Menu 2	Sub Menu 3	Sub Menu 4	Sub Menu 5	Sub Menu 6	Values
Communi-cation	Remote Setup	User 1				Freeze Screen [default]
						Blank Screen
						PIP/PBP
						Aspect Ratio
						Information Hide
						Network setup
						Projector ID
						Color Matching
						Reset Selective
						Quick Switch Code
						Audio Mute
						Audio Volume
		User 2				Freeze Screen
						Blank Screen
						PIP/PBP [default]
						Aspect Ratio
						Information Hide
						Network setup
						Projector ID
						Color Matching
						Reset Selective
						Quick Switch Code
						Audio Mute
						Audio Volume
	Network Setup	LAN Interface				RJ-45 [default]
						HDBaseT
		MAC Address				[read only]
		Network Status				[read only] Connected
						[read only] Disconnected
		DHCP				Off [default]
						On
		IP Address				[default: 192.168.0.100]
		Subnet Mask				[default: 255.255.255.0]
		Gateway				[default: 192.168.0.51]
		DNS				[default: 0.0.0.0]
		Apply				Yes
						Cancel [default]
		Network Reset				Yes
	Email Notification	Email				
		Email 1				[read only]
		Email 2				[read only]
		Event				
		Fan Error				Off [default]
						Email
		Power On/Off				Off [default]
						Email

Main Menu	Sub Menu 2	Sub Menu 3	Sub Menu 4	Sub Menu 5	Sub Menu 6	Values
Communi-cation	Email Notification	Video Loss				Off [default]
						Email
		Laser				Off [default]
						Email
		Reset				Yes
						Cancel [default]
	Control	Crestron				Off
						On [default]
		IP Address				[default: 192.168.0.2]
		IP ID				2 ~ 255 [default: 5]
		Port				0 ~ 65535 [default: 41794]
		Crestron Setup Apply				Yes
						Cancel [default]
		PJ Link				Off
						On [default]
		Authentication				Off [default]
						On
		Password				[read only]
		Service				[default: 192.168.0.3]
		PJ Link Setup Apply				Yes
						Cancel [default]
		Extron				Off
						On [default]
		AMX				Off
						On [default]
		Telnet				Off
						On [default]
		HTTP				Off
						On [default]
		Reset				Yes
						Cancel [default]
	Baud Rate	Serial Port In				1200
						2400
						4800
						9600
						19200
						38400
						57600
						115200 [default]
	Reset					Yes
						Cancel [default]

Main Menu	Sub Menu 2	Sub Menu 3	Sub Menu 4	Sub Menu 5	Sub Menu 6	Values
Information	Device	Regulatory				
		Serial Number				
		Projection Hours				
	System Status	Standby Mode				
		Light Source Mode				
		Light Source Hours				
		Total Hours				
		Normal				
		Eco Mode				
		Custom Power				
		Ambient Temp				
		Temperature				
	Communication	Projector ID				
		Remote Code				
		Network				
		LAN Interface				
		MAC Address				
		Network Status				
		DHCP				
		IP Address				
		Subnet Mask				
		Gateway				
		DNS				
		Control				
		Crestron				
		Extron				
		PJ Link				
		AMX				
		Telnet				
		HTTP				
	Signal	Input Signal				
		Resolution				
		Signal Format				
		Pixel Clock				
		Horz Refresh				
		Vert Refresh				
		Color Space				
		Picture Mode				
		Second Signal				
		Resolution				
		Signal Format				
		Pixel Clock				
		Horz Refresh				
		Vert Refresh				
		Color Space				

Main Menu	Sub Menu 2	Sub Menu 3	Sub Menu 4	Sub Menu 5	Sub Menu 6	Values
Information	Firmware Version	Main Version				
		I-SCALER Version				
		F-MCU Version				
		M-MCU Version				
		A-MCU Version				
		LAN Version				
		Formatter Version				
		HDBaseT Version				
		Camera Version				

USING THE PROJECTOR

Image menu

Learn how to configure image settings.

Submenus

- Picture Mode
- Dynamic Range
- Brightness
- Contrast
- Sharpness
- Gamma
- Dynamic Contrast
- Color Settings
- Wall Color
- 3D Setup

Picture Mode

There are many factory presets optimized for various types of images.

Presentation

This mode is suitable for showing in front of public in connection to the PC.

Bright

Maximum brightness from PC input.

Cinema

Provides the best colors for watching movies.

HDR

Decodes and displays High Dynamic Range (HDR) content for the deepest blacks, brightest whites, and vivid cinematic color using REC.2020 color gamut. This mode will be automatically enabled if HDR is set to Auto (and HDR Content is sent to projector – 4K UHD Blu-ray, 1080p/4K UHD HDR Games, 4K UHD Streaming Video). While HDR mode is active, other display modes (Cinema, Reference, etc.) cannot be selected as HDR delivers color that is highly accurate, exceeding the color performance of the other display modes.

sRGB

Standardized accurate color.

DICOM SIM.

This mode can project a monochrome medical image such as an X ray radiography, MRI, etc.

Blending

When using multiple projectors, this mode can eliminate the visible banding and create a single bright, high resolution image across the screen.

3D

To experience the 3D effect, you need to have 3D glasses, make sure your PC/portable device has a 120 Hz signal output quad buffered graphics card and have a 3D Player installed.

2D High Speed

Displays the status of 2D High Speed mode.

User

Memorize user’s settings.

Note:

- *When 3D mode is selected, the Presentation, Bright, Cinema, HDR, sRGB, DICOM SIM., Blending, and 2D High Speed mode will be unavailable.*
- *When 2D High Speed mode is selected, the Presentation, Bright, Cinema, HDR, sRGB, DICOM SIM., Blending, and 3D mode will be unavailable.*
- *When Blending mode is selected, the HDR, 3D, and 2D High Speed will be unavailable*.

Dynamic Range

Configure the High Dynamic Range (HDR) setting and its effect when displaying video from 4K Blu-ray players and streaming devices.

Note: *Only HDMI supports the Dynamic Range function.*

HDR (High Dynamic Range)

- **Off**: Turn off HDR Processing. When set to Off, the projector will NOT decode HDR content.
- **Auto**: Auto detect HDR signal.

HDR Picture Mode

- **Bright**: Choose this mode for brighter more saturated colors.
- **Standard**: Choose this mode for natural looking colors with a balance of warm and cool tones.
- **Film**: Choose this mode for improved detail and image sharpness.
- **Detail**: The signal comes from OETF conversion to achieve the best color matchings.

Brightness

Adjust the brightness of the image.

Contrast

The contrast controls the degree of difference between the lightest and darkest parts of the picture.

Sharpness

Adjust the sharpness of the image.

Gamma

Set up gamma curve type. After the initial setup and fine tuning is completed, utilize the Gamma Adjustment steps to optimize your image output.

Film

For home theater.

Graphics

For PC / Photo source.

Standard (2.2)

For standardized setting.

Vivid

Best for playing games. In this mode, color saturation and brightness are well-balanced.

3D

Best for playing 3D videos.

Blackboard

Best for projecting on to a blackboard.

DICOM SIM.

Best for projecting monochrome medical images, such as X-ray diagram.

1.8 / 2.0 / 2.4 / 2.6

For specific PC / Photo source.

Note: *When Blending mode is selected, only gamma Standard2.2 is supported.*

Dynamic Contrast

Set up the Dynamic Contrast to maximize the contrast for dark content.

- **Dynamic Black:** Enable this function to automatically adjust the contrast ratio for video sources. It improves the black level in dark scenes by reducing the light output.
- **Speed:** Adjust the speed of the light source correction. The value ranges from 1 to 15. A lower value makes the correction slower and less aggressive while a higher value results in the faster correction.
- **Strength:** Set the strength of the dynamic contrast adjustment. The value ranges from 0 to 3, the higher the value the stronger the correction.
- **Level:** Adjust the light source when the brightness level of the current content gets lower than the set value. The value ranges from 50% to 100%. The higher the value, the larger the range to adjust the light source.
- **Extreme Black:** Enable this function to automatically increase the contrast ratio by turning off the laser light when black image is detected.
- **AV Mute Timer:** Set a timer for the laser light to turn off after detecting black content. The set value ranges from 0s to 10s.
- **Black Signal Level:** Set a black level value as the threshold for the Real Black function. The value can be adjusted from 0% to 5%, with 0 being the darkest black and 5 being the brightest.

Note:

- *When Dynamic Black is turned on, the Extreme Black will be unavailable.*
- *When Dynamic Black is turned off, the Speed, Strength, and Level will be unavailable.*
- *When Extreme Black is turned on, the Dynamic Black, Speed, Strength, and Level will be unavailable.*

Color Settings

Configure the color settings of the projected image to improve the color performance.

Color

Adjust the saturation of the selected color. The value indicates the color shifts from or towards the white in the center of the chromaticity diagram.

Tint

Adjust the color balance of red and green in video images.

Color Temperature

Adjust the color temperature of the projected image. The available options are Warm, Standard, or Cool.

Color Wheel Speed

Set the projector color wheel speed to 2X or 3X.

White Balance

Adjust the white balance of the projected image via gain and offset. Gain and offset are individual controls for each RGB channels used to set greyscale. The Gains calibrate the color of the dark parts and Bias calibrate the white parts.

- **Red / Green / Blue Gain:** Adjust the color of the image's bright areas.
- **Red / Green / Blue Offset:** Adjust the color of the image's dark areas.

White Enhancement

Adjust the image color brightness while providing more vibrant colors, in increments from 0 to 10.

Color Space

Select a color space that has been specifically tuned for the input signal. The available options are Auto (default), RGB (0~255), RGB (16~235), REC709, and REC601.

Color Matching

Change the color of a projected image by adjusting each color component in the image. The adjustable color includes Red, Green, Blue, Cyan, Yellow, and Magenta (R / G / B / C / Y / M).

- **Auto Test Pattern:** Enable the function to view a specific color pattern while adjusting.
- **R / G / B / C / Y / M:** Select a color for further adjustment.
  - **Hue**: Adjust the hue of the selected color. The value reflects the number of degrees of rotation around the chromaticity diagram from the original color. Increasing value indicates counterclockwise rotation, and decreasing value, clockwise rotation.
  - **Saturation**: Adjust the saturation of the selected color. The value indicates the color shifts from or towards the white in the center of the chromaticity diagram.
  - **Luminance**: Adjust the luminance of the selected color. Increase the value to brighten the image (add white to a color) or decrease the value to darken the image (add black to a color).
- **Reset:** Reset the function settings to factory default values.

Note: *When 3D, 2D High Speed, or Blending mode is selected, the Color Temperature and White Enhancement will be unavailable.*

Wall Color

Set the wall color of the projector to achieve best color performance for a specific wall. The available options are Off, Blackboard, Light Yellow, Light Green, Light Blue, Pink, and Gray.

3D Setup

3D video file combines two slightly different images (frames) of the same scene representing the different views that the left and right eyes see. When these frames are displayed fast enough and viewed with 3D glasses synchronized with the left and right frames, the viewer's brain then assemble the separate images into a single 3D image. 3D Menu provides options to set up the 3D functions to correctly display 3D videos.

3D Mode

Enable or disable the 3D function.

3D Format

Select a proper 3D format for the 3D input signal. The available options are Auto, Frame Packing, Side by Side, Top and Bottom, and Frame Sequential.

3D Tech

Select a proper 3D technology according to how the 3D sync signal is processed.

- **DLP-Link:** Select DLP-Link when the 3D sync signal is generated by the DLP Link technology built into the projector. DLP Link works only with the glasses that are compatible with DLP 3D technology and the 3D function is enabled.
- **3D Sync:** Select 3D Sync when the 3D sync out signal is sent to an emitter or another projector through the 3D sync out port.

3D-2D

Transform the 3D content to 2D images.

- **3D:** Play the 3D content normally.
- **L:** Play the left images of the 3D content.
- **R:** Play the right image of the 3D content.

3D Sync Out

Set up the transmission of the 3D sync output signal.

- **To Emitter:** Send the 3D sync signal to the emitter connected to the 3D sync out port.
- **To Next Projector:** Send the 3D sync signal to next projector when using multiple projectors.

3D Invert

When the 3D video does not appear correctly, use this function to invert the 3D left and right frames.

Frame Delay

Set a frame delay value for the projector to correct the time difference between the 3D signal being given and the result being executed. This function works only when L/R Reference is set to Field GPIO. When performing 3D blending on multiple projectors, set the frame delay for each projector to correct the non-synchronous images.

Reset

Reset the function settings to factory default values.

Note: *When 2D High Speed or Blending mode is selected, the 3D Tech, 3D-2D, 3D Sync Out, 3D Invert, Frame Delay will be unavailable.*

Save to User

Save the image settings to the User mode.

Apply to User

Apply the image settings to User-Presentation, User-Bright, User-Cinema, User-HDR, User-sRGB, User-DICOM SIM., User-Blending, User-3D, or User-2D High Speed.

Reset

Reset all the image settings to factory default values.

USING THE PROJECTOR

Display menu

Learn how to configure the settings to properly project images according to your installation circumstances.

Submenus

- Aspect Ratio
- Digital Zoom
- Image Shift
- Geometric Correction
- Edge Mask
- Freeze Screen
- Test Pattern
- PIP/PBP

Aspect Ratio

Set the aspect ratio of the projected image. The available options are Auto (default), 4:3, 16:9, 16:10, LBX, or Native. Select Auto to display the detected image size.

- **Auto:** Automatically selects the appropriate display format.
- **4:3:** This format is for 4:3 input sources.
- **16:9:** This format is for 16:9 input sources, like HDTV and DVD enhanced for Wide screen TV.
- **16:10:** This format is for 16:10 input sources, like widescreen laptops.
- **LBX:** This format is for non-16x9, letterbox source and if you use external 16x9 lens to display 2.35:1 aspect ratio in full resolution.
- **Native:** This format displays the original image without any scaling.

Note:

- *Detailed information about LBX mode*
  - *Some Letter-Box Format DVDs are not enhanced for 16x9 TVs. In this situation, the image will not look right when displaying image in 16:9 mode. In this situation, please try to use the 4:3 mode to view the DVD. If the content is not 4:3, there will be black bars around the image in 16:9 display. For this type of content, you can use LBX mode to fill the image on the 16:9 display.*
  - *If you use an external anamorphic lens, this LBX mode also allows you to watch a 2.35:1 content (include Anamorphic DVD and HDTV film source) that supports anamorphic wide is enhanced for 16x9 Display in a wide 2.35:1 image. In this case, there are no black bars. Light source power and vertical resolution are fully utilized.*
- *When 3D or 2D High Speed mode is selected, the Aspect Ratio will be unavailable.*

WUXGA Scaling Table

	480i/p	576i/p	1080i/p	720p	PC
Auto	- If source is 4:3, auto resize to 1600 x 1200. - If source is 16:9 auto resize to 1920 x 1080. - If source is 16:10 auto resize to 1920 x 1200.				
4x3	Scale to 1600 x 1200.				
16x9	Scale to 1920 x 1080.				
16x10	Scale to 1920 x 1200.				
LBX	Scale to 1920x1440, then get the central 1920x1200 image to display				
Native	- 1:1 mapping centered. - No scaling will be made; the image is displayed with the resolution based on input source.				

WUXGA Auto Mapping Rule

Auto	Input resolution		Auto/Scale	
	H-resolution	V-resolution	1280	800
4:3	640	480	1600	1200
	800	600	1600	1200
	1024	768	1600	1200
	1280	1024	1600	1200
	1400	1050	1600	1200
	1600	1200	1600	1200
Wide Laptop	1280	720	1920	1080
	1280	768	1920	1152
	1280	800	1920	1200
SDTV	720	576	1350	1080
	720	480	1620	1080
HDTV	1280	720	1920	1080
	1920	1080	1920	1080

Digital Zoom

Digital adjust the size of the projected image.

Proportional

Enable the function to have the image's height and width changed at the same ratio.

Horizontal

Use the ◀ and ▶ buttons to change the width of the projected image.

Vertical

Use the ▲ and ▼ buttons to change the height of the projected image.

Horizontal Shift

Use the ◀ and ▶ buttons to adjust the horizontal shift the image.

Vertical Shift

Use the ▲ and ▼ buttons to adjust the vertical shift the image.

Reset

Reset digital zoom settings to factory default values.

Note: *When 3D or 2D High Speed mode is selected, the Digital Zoom will be unavailable.*

Image Shift

Adjust the projected image position.

H. Position

Use the ◀ and ▶ buttons to adjust the projected image position horizontally.

V. Position

Use the ▲ and ▼ buttons to adjust the projected image position vertically.

Reset

Reset image shift settings to factory default values.

Note: *When 3D or 2D High Speed mode is selected, the Image Shift will be unavailable.*

Geometric Correction

Configure the geometric settings to reshape the image for different projection surfaces.

Warp Control

Configure the geometric settings to reshape the image for different projection surfaces.

- **Basic:** Configure keystone, pincushion, 4-corner settings.
- **Advanced:** Configure grid color, grid background, warp setting, blend setting, and black level.
- **AP:** Use the warp and blend software tools to control the projector. When the software warp and blend control is enabled, the projector's built in geometry functions are disabled.

Basic Warp

Configure basic warp settings.

Note: *When Advanced or AP of Warp Control is selected, the Keystone, Pincushion, 4-Corner will be unavailable.*

- **Keystone:** Keystone function is used to adjust the images in asymmetric rectangle shape.
  - **Horizontal:** Adjust the left and right side of the projected image to make it an even rectangle. It is used for the images with unequal left and right sides.

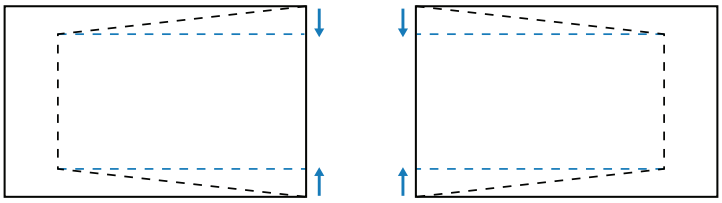

  - **Vertical:** Adjust the top and bottom side of the projected image to make it an even rectangle. It is used for the images with unequal top and bottom sides.

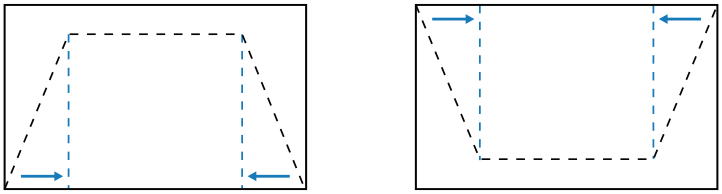

- **Pincushion:** Pincushion function is used to adjust the image with barrel or pincushion distortion.
  - **Horizontal:** Correct the projected image with horizontal barrel or pincushion distortion.

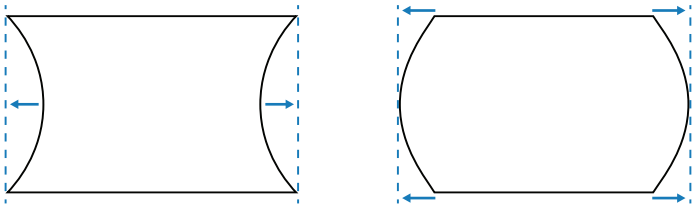

  - **Vertical:** Correct the projected image with vertical barrel or pincushion distortion.

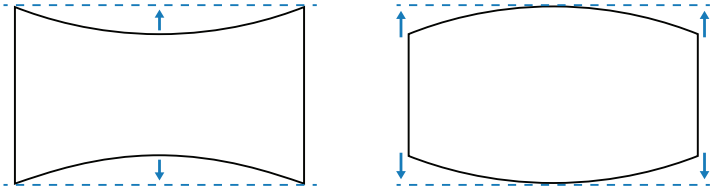

- **4-Corner:** Reshape the image by moving the 4 corners of the image to have it fit a specific projection surface.

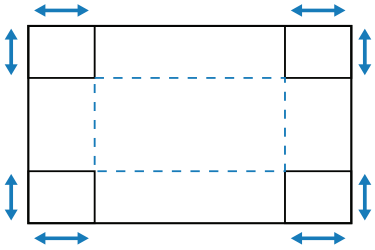

Advanced Warp

Configure advanced warp settings.

Note: *When Basic or AP of Warp Control is selected, the Advanced Warp will be unavailable.*

- **Grid Color:** Select a grid color for warp and blend pattern between Green, Magenta, Red, and Cyan.
- **Grid Background:** Select the grid background between Black and Transparent.
- **Warp Setting:** Configure warp settings.
  - **Grid Point:** Set the grid points of warp pattern. Options include: 2x2 (default), 3x3, 5x5, 9x9, and 17x17.
  - **Warp Inner:** Turn on to adjust the inner grid.
  - **Warp Sharpness:** When the grid lines are warped from straight into curve, the grid lines will be distorted and become jagged. To avoid the line jagging, adjust the warp sharpness to blur or sharpen the edge of the images.
- **Blend Setting:** Configure the blend settings directly on the projector to merge two or more adjacent images into one larger and seamless image.
  - **Blend Width:** Set the blend pattern width.
  - **Overlap Grid Number:** Set the blend overlap grid number.
  - **Gamma:** Select the gamma value of the blend area to adjust the curvature of the blending effect.

Note: *For installation flexibility we have not applied a FW limitation to the blending menu of this device. Distortion may occur if you attempt to warp to an extreme level. For more complex installs, at a cost, please contact your dealer for external devices for warping.*

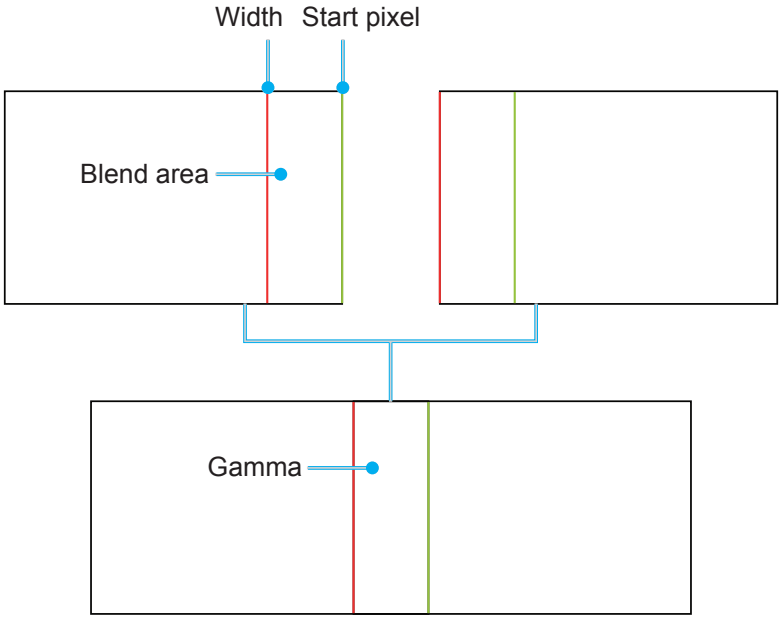

- **Black Level:** When two images overlap, the overlapping area can appear differently from the areas that do not overlap. You can use the projector's Black Level setting to make the difference less noticeable.
  - **Area:** Mark the area that needs adjusting.
  - **Enable:** Enable or disable the black level adjustment in the selected area.
  - **Edit Area:** Modify the black level of the selected area.
  - **Add Point:** Add up to 32 area control points for black level adjustment.
  - **Remove Point:** Remove at least 4 control points from the selected area.

    Note: *After adding or removing a control point, press **Enter** to move to the next point counterclockwise.*
  - **Brightness:** Adjust the brightness of the selected area.
  - **Red/Green/Blue:** Adjust each color individually of the selected area.
  - **Reset:** Reset the black level to factory default values either on the Bottom or on the Top area or on both areas.

Memory

The projector allows the user to save up to five geometry memories, including the ones set directly on the projector and the ones configured via external software tools. The available options are Save Memory, Apply Memory, and Clear Memory.

Reset

Reset geometric settings to factory default values.

Edge Mask

The edge blending function allows you to hide one or multiple edges of the projected image. You can use this function to remove the video encoding noise on the edges of the video images.

Note: *When 3D, 2D High Speed, or PIP/PBP is turned on, the Edge Mask will be unavailable.*

Freeze Screen

Select to pause the display screen despite any change in the source device.

Test Pattern

Select a test pattern. The available options are Off, Green Grid, Magenta Grid, White Grid, White, Black, Red, Green, Blue, Yellow, Magenta, Cyan, ANSI Contrast 4x4, Color bar, and Full screen.

PIP/PBP

PIP/PBP (picture in picture/picture by picture) allows simultaneously displaying two images from two input sources.

Note: *The PIP/PBP function does not support 3D, 2D High Speed mode, Aspect Ratio, Digital Zoom, and Image Shift.*

Screen

Select the appropriate PIP/PBP mode or disable the function.

- **Off:** Disable PIP/PBP mode.
- **PIP:** Display one input source on the main screen and the other input source in an inset window.
- **PBP:** Display two images of the same size on the screen.

Main Source

Select an input source for the main image. The available input sources are VGA, HDMI1, HDMI2, and HDBaseT.

Sub Source

Select an input source for the main image. The available input sources are VGA, HDMI1, HDMI2, and HDBaseT.

Swap

Swap the main source and sub source.

Size

Change the display size of the sub source in PIP mode. The available options are Large, Medium, and Small.

Location

Adjust the location of the sub image. In the layout chart below, the “P” indicates the main image:

- **PBP Layout**

PBP Layout	PBP Size		
	Small	Medium	Large
PBP, Main Left			
PBP, Main Right			
PBP, Main Top	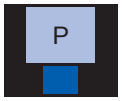		
PBP, Main Bottom			

- **PIP Layout**

PIP Layout	PIP Size		
	Small	Medium	Large
PIP, Bottom Right			
PIP, Bottom Left			
PIP, Top Left			
PIP, Top Right			

Note: *PIP/PBP compatibility table as described below.*

PIP/PBP			Main Source				
			VGA	HDMI 2.0	HDMI 1.0		HDBaseT
				v1.4	v1.4	v2.0	
Sub Source	VGA		—	V	V	V	V
	HDMI 2.0	v1.4	V	—	V	V	V
	HDMI 1.0	v1.4	V	V	—	—	V
		v2.0	V	V	—	—	V
	HDBaseT		V	V	V	V	—

Note:

a) *Flashing lines may occur if the bandwidth of both inputs are too high, please try to reduce the resolution.*

b) *Frame tearing may occur due to a difference in frame rate between the Main and the Sub picture, please try to match the frame rate for each input.*

Reset

Reset all the display settings to factory default values.

Input Settings menu

Learn how to configure the projector input settings.

Submenus

- Auto Source
- Quick Resync
- Active Inputs
- Latency Adjustment
- VGA
- HDMI

Auto Source

When Auto Source is enabled, the projector automatically detects and selects the input signal. Once an input source is selected, press the Input button on the remote control or keypad to switch to other available sources. When the function is disabled, pressing Input will bring up the Active Inputs submenu.

Quick Resync

Set the quick resync feature.

Active Inputs

Select an input signal from the source list. The available input sources are VGA, HDMI1, HDMI2, and HDBaseT.

Latency Adjustment

Enable this feature to reduce response time.

VGA

Setup the VGA source by selecting the proper Phase and Resolution.

HDMI

Set the projector's HDMI ports.

Output

Set the HDMI 1 or HDMI 2 port to output the signal.

HDMI 1 EDID/HDMI 2 EDID

When receiving a HDMI signal, set the projector's EDID compatibility to display the signal correctly. Select 1.4 for the input devices with HDMI 1.4, or 2.0 for HDMI 2.0 devices.

Note: *For a better 3D experience, it is recommended to choose HDMI 1.4.*

Reset

Reset all the input settings to factory default values.

USING THE PROJECTOR

Device Setup menu

Learn how to configure the system settings for the projector.

Submenus

- Language
- Projection
- Lens Settings
- Schedule
- Date and Time
- Power Settings
- Light Source Settings
- Shutter
- Audio
- Security
- On Screen Display
- Logo Setup
- High Altitude
- User Data
- System Update

Language

Select a language for the OSD menu. The available languages are English, German, French, Italian, Spanish, Portuguese, Polish, Dutch, Norwegian, Traditional Chinese, Simplified Chinese, Japanese, Korean, Russian, Hungarian, and Thai.

Projection

Change the image direction by selecting a proper projection mode.

Ceiling

Enable the function for ceiling mount installation.

Rear

Check the function for rear projection.

Lens Settings

Configure the lens settings to adjust the image quality and position.

Focus

Use the ▲ and ▼ buttons to adjust the focus of the projected image.

Zoom

Use the and buttons to adjust the size of the projected image.

Lens Shift

Use the ▲ ▼ ◀ ▶ buttons to adjust the lens position to shift the projected area.

Lens Shift Memory

This projector can save up to five lens settings, which records the lens position, zoom and focus.

- **Save Memory:** Select a record from 1 to 5 to save the current lens settings.
- **Apply Memory:** Select a record from 1 to 5 to apply the lens settings.
- **Clear Memory:** Clear the saved lens records.

Note:

- *Process the lens calibration before setup lens shift memory.*
- *Performing a lens calibration will clear the saved lens records.*
- *When the lens calibration is not competed, the lens shift memory will be unavailable.*

Lens Calibration

Calibrate the lens position to return it to the center.

Lens Lock

Lock the lens to prevent the lens motors from moving, which disables all lens functions.

Note: *When Lens Lock is turned on, the Focus, Zoom, Lens Shift, Lens Shift Memory, and Lens Calibration will be unavailable.*

Reset

Reset the lens settings to factory default values.

Schedule

Schedule the projector functions to operate automatically at the set time.

Date and Time

Display the date and time for the projector.

Schedule Mode

Enable or disable the schedule function. If the projector is controlled via external devices or software, the Schedule Mode displays AP Mode, and the projector's schedule functions are grayed out.

View Today

View the event list scheduled for today.

Monday to Sunday

Set up the schedule for days of a week. On the Schedule menu page, select a day and configure the schedule settings.

- **Schedule Enable:** Enable or disable the schedule function for the selected day.
- **Event 01-08:** Select an event record number, and set up the schedule details.
  - **Time:** Set the time for the event.
  - **Event:** Select a function for the event, which operates automatically at the set time. The available functions are Power Settings, Input Source, Light Source Mode, and Shutter.
  - **Reset:** Reset the event settings.
- **More Events / Previous Events (Event 01-16):** Display more event records, and select one to set up the schedule details.
- **Copy Events To:** Copy the events setup for the day to another day.
- **Reset the Day:** Reset the schedule settings for the day.

Reset Schedule

Reset all of the schedule settings.

Date and Time

Set the date and time of the projector.

Clock Mode

Set the clock mode to NTP Server or Manual.

Note: *To use NTP Server, make sure the projector is connected to the Internet.*

Date

Set a date for the projector. The date format is in Year/Month/Date.

Time

Set the time for the projector.

Daylight Saving Time

Enable or disable the daylight savings function.

NTP Server

Select a NTP Server for the network clock mode.

Time Zone

Set a time zone for the network clock mode.

Update Interval

Set the date and time update interval.

Apply

Apply date and time modifications.

Note:

- *When Use NTP Server of Clock Mode is selected, the Date and Time will be unavailable.*
- *When Manual of Clock Mode is selected, the Daylight Saving Time, NTP Server, Time Zone, and Update Interval will be unavailable.*

Power Settings

Configure the projector's power settings.

Power Mode (Standby)

Setup the projector's standby mode.

- **Eco:** Minimum power consumption (0.5 Watt) which does not allow network control.
- **Active:** Low power consumption (< 2 Watt) which allows the LAN module to enter sleep mode and supports to be woken by Wake on LAN (WoL). When the LAN module is woken by WoL, the projector is ready to receive commands over the network.
- **Communication:** More power consumption that allows controlling the projector over the network.

Signal Power On

Turn on this function to have the projector automatically turning on when connected to HDMI input sources. It only applies to the standby projector set to Communication mode.

Auto Power Off

Set an interval timer for the projector to automatically turn off if no signal is detected within the specified time period. Press the ◀ and ▶ buttons to add or reduce time, 1 minutes for each press.

Sleep Timer

Set an interval timer for the projector to automatically turn off after operating for the specified amount of time.

12V Trigger

Use this function to enable or disable the trigger.

Note: *3.5mm TS type mini jack that outputs 12V 200mA (max.) for relay system control.*

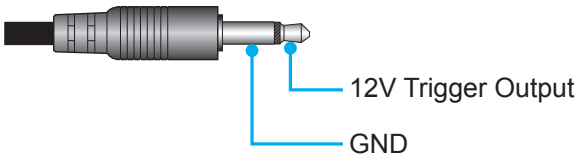

Reset

Reset the power settings to factory default values.

Light Source Settings

Set up the light source to control the projector brightness.

Light Source Mode

Select a light source mode depending on the installation requirements. The available options are Normal, Eco Mode, and Custom Power.

Custom Brightness

When the Light Source Mode is set to Custom Mode, set up the custom brightness level. Set up the Constant Brightness to maintain the image brightness at a specified level. A special algorithm is designed to compensate for the natural decay of brightness so that the image can be maintained at a fixed brightness level.

- **Brightness Level:** Adjust the brightness level from 30% to 100%.
- **Constant Brightness:** Enable to maintain the image brightness at the set brightness level. A special algorithm is designed to compensate for the natural decay of brightness so that the image can be maintained at a fixed brightness level.

Note: *When Dynamic Black or Extreme Black is turned on, only Normal of Light Source Mode is supported.*

Shutter

Set up the shutter behavior.

Fade-In

This function allows the fading-in effect when turning off the shutter. The length of the fading effect can be adjusted from 0.5s to 5s.

Fade-Out

This function allows the fading-out effect when turning on the shutter. The length of the fading effect can be adjusted from 0.5s to 5s.

Startup

Select the shutter behavior when turning on the projector.

- **Shutter Off:** Projector projects images normally after being powered on.
- **Shutter On:** Projector automatically turns on shutter after being powered on.

Audio

Set up the projector audio.

Mute

Turn off or turn on the projector sound.

Volume

Adjust the projector audio volume level.

Security

Set up security verification to protect the projector.

Security

Select On to protect the projector with a password. If the user enters incorrect password three times, a message will pop up warning that the projector shuts down in 10 seconds.

Security Timer

Specify the length of time the projector can be used without the password. Once the timer counts to 0, the user must enter a password to use the projector. The timer restarts every time the projector is turned on.

Change Password

Change the projector password.

Note: *In the last minute before reaching a specified timer, including Auto Power Off, Sleep Timer, and Security Timer, an on-screen message will pop up warning that the projector shuts down in 60 seconds. Press any button on the remote control or projector keypad to reset the timer and the projector remains on.*

On Screen Display

Set up the on screen display menus.

Menu Location

Select the menu location from Top Left, Top Right, Center, Bottom Left, and Bottom Right.

Menu Transparency

Set the menu transparency level.

Menu Timer

Set the length of time the menu displays on the screen.

Information Hide

Enable or disable the corner information messages, such as input source, IP address, and so on.

Background

Set a background color to display when no input signal is detected. The available options are Blue, Black, White, and Logo.

Logo Setup

Set up the logo for the startup screen.

Change Logo

Change the logo for the startup screen. Apart from the Default logo, user can select from Default, Neutral, User Logo, and Captured Logo.

- **Default:** The projector default logo.
- **Neutral:** The logo is not displayed on the startup screen.
- **User Logo:** The user logo uploaded from the web control panel.
- **Captured Logo:** The logo saved via the Logo Capture function.

Note: *The supported logo format is PNG and size is 1920 x 1200 pixels.*

Logo Capture

Capture part of the projected image and save it as a customized logo.

Delete Logo

Delete the saved customized logo, including the Captured Logo and Use Logo.

High Altitude

Select On to increase the fan speed. To ensure the image quality and prevent damage to the projector, enable High Altitude mode in high temperature, high humidity, or high altitude environment.

User Data

User can save the projector settings as user data and reload the settings later.

- **Save all settings:** Save all of the projector settings as user data. User can save up to 5 records.
- **Load all settings:** Load the previously saved user data.

System Update

Update the system automatically or manually.

- **Auto:** System checks for new updates automatically every time it is connected to the Internet.
- **Manual:** Manually update the system firmware.

Reset

Reset the settings to factory default values.

- **Reset OSD:** Reset OSD settings to default values.
- **Reset to Default:** Reset all projector settings to default values.
- **Reset Selective:** Reset the settings of one of the main menus. User can choose from Image, Display, Input, Communication, and Setup.

Communication menu

Communication menu is used to configure the settings that allow the projector to communicate with other projectors or control devices.

Submenus

- Projector ID
- Remote Setup
- Network Setup
- Email Notification
- Control
- Baud Rate

Projector ID

Assign an ID code for the projector from 00 to 99. Use this code as the projector ID when controlling the projector by RS232, Telnet or other control methods.

Remote Setup

Configure the settings of the Infra-Red (IR) remote control.

Remote Code

Set the remote custom code by pressing the remote ID button for 3 seconds and you will notice the remote indicator (above the Off button) starts blinking. Then, input a number between 00-99 using the keyboard numbered keys. After inserting the number, the remote indicator blinks twice quickly indicating that the remote code has changed.

Quick Switch Code

The IR receiving function of the projector can be temporarily deactivated by hot key(0~9) to avoid the IR interference between projectors. The remote ID needs to be set to All.

Note: *When hotkey is on, the default function (Direct Source, Zoom/Focus, 3D) are inactive temporarily.*

IR Function

Set the remote receiver for the projector to control the communication between the projector and the IR remote.

- **Front:** Enable or disable the front remote receiver.
- **Top:** Enable or disable the top remote receiver.
- **HDBaseT:** Select On to set the HDBaseT terminal as the remote receiver.

User 1 / User 2

Assign a function to the User 1 and User 2 buttons on the remote control. It allows you to use the function easily without going through the OSD menus. The available functions are Freeze Screen [User 1 deafult], Blank Screen, PIP/PBP [User 2 default], Aspect Ratio, Information Hide, Network setup, Projector ID, Color Matching, Reset Selective, Quick Switch Code, Audio Mute, and Audio Volume.

Network Setup

Configure the projector's network settings.

LAN Interface

To avoid clash, specify the LAN interface to RJ-45 or HDBaseT.

MAC Address

Display the MAC address. (Read only)

Network Status

Display the network connection status. (Read only)

DHCP

Turn on DHCP to automatically acquire IP address, subnet mask, gateway, and DNS.

IP Address

Assign the projector's IP address.

Subnet Mask

Assign the projector's subnet mask.

Gateway

Assign the projector's gateway.

DNS

Assign the projector's DNS.

Apply

Apply the wired network settings.

Network Reset

Reset the network settings to default factory values.

Note: *When DHCP is turned on, the IP Address, Subnet Mask, Gateway, and DNS will be unavailable.*

Email Notification

Set up the email notification for the projector.

Fan Error / Power On/Off / Video Loss / Laser

When a Fan Error, Power On/Off, Video Loss, or Laser occurs on the projector, an email notification will be sent to the user

Control

This projector can be controlled remotely by a computer or other external devices through wired network connection. It allows the user to control one or more projectors from a remote control center, such as powering the projector on or off, and adjusting the image brightness or contrast.
Use the Control submenu to select a control device for the projector.

Crestron

Control the projector with Crestron controller and related software (Port: 41794).

For more information, please visit http://www.crestron.com.

- **Crestron Setup:** Setup the Crestron IP Address, IPID, and Port. Then select Crestron Setup Apply to save the modifications.

PJ Link

Control the projector with PJLink v1.0 commands (Port: 4352).

For more information, please visit http://pjlink.jbmia.or.jp/english.

- **PJ Link Service:** Setup the address for the PJ Link Authentication, Password, Service, and select PJ Link Setup Apply to save the modifications.

Extron

Control the projector with Extron devices (Port: 2023).

For more information, please visit http://www.extron.com.

AMX

Control the projector with AMX devices. (Port: 9131)

For more information, please visit http://www.amx.com.

Telnet

Control the projector using RS232 commands though Telnet connection. (Port: 23)

For more information, refer to "Using RS232 command by Telnet" on page 66.

HTTP

Control the projector with web browser. (Port: 80)

For more information, refer to “Using the web control panel” on page 64.

Reset

Reset the control functions to default factory values.

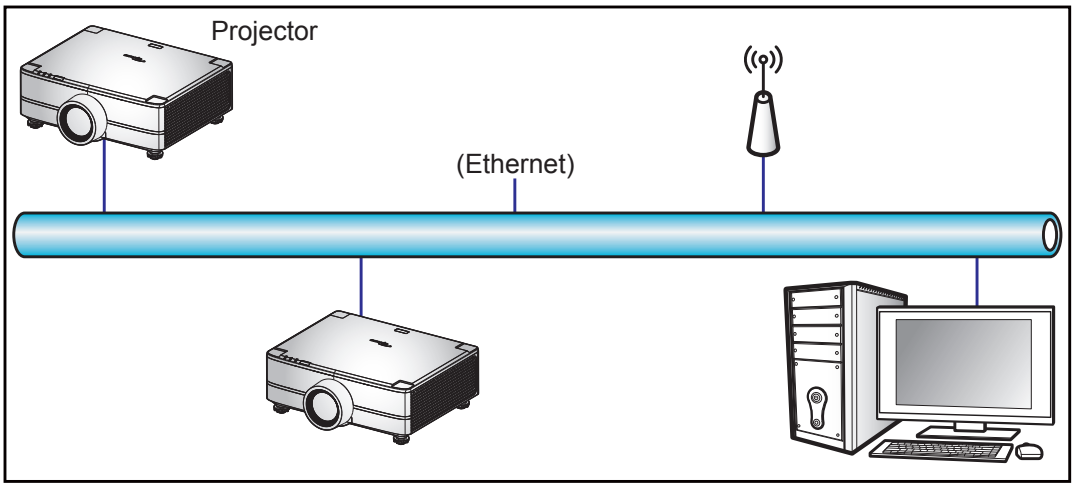

Note:

- *Crestron is a registered trademark of Crestron Electronics, Inc. of the United States.*
- *Extron is a registered trademark of Extron Electronics, Inc. of the United States.*
- *AMX is a registered trademark of AMX LLC of the United States.*
- *PJLink applied for trademark and logo registration in Japan, the United States of America, and other countries by JBMIA.*
- *For more information about the various types of external devices which can be connected to the LAN / RJ45 port and remotely control the projector, as well as the supported commands for these external devices, please contact the Support-Service directly.*
- *Support OMSC and OMSL. For more information, please contact the Support-Service directly.*

Baud Rate

Set the baud rate for Serial Port In and Serial Port Out. The available options are 1200, 2400, 4800, 9600, 19200, 38400, 57600, and 115200 (default).

Reset

Reset all network settings to default factory values.

USING THE PROJECTOR

Using the web control panel

The web control panel allows the user to configure various projector settings using a web browser from any personal computer or mobile devices.

System Requirements

To use the web control panel, make sure your devices and software meet the minimum system requirements.

- RJ45 cable (CAT-5e) or wireless dongle
- PC, laptop, mobile phone, or tablet installed with a web browser
- Compatible web browsers:
  - Microsoft Edge 40 or higher version
  - Firefox 57 or higher version
  - Chrome 63 or higher version

Overview of the web control panel

Configure the projector settings using web browser.

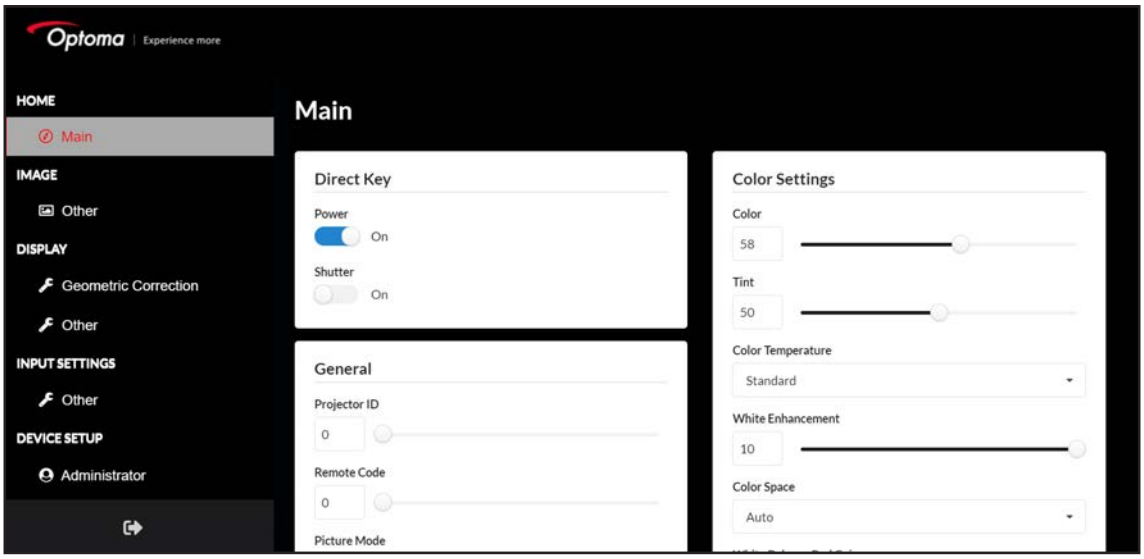

Menu	Description
HOME	View the projector information and firmware version details.
IMAGE	To configure image settings.
DISPLAY	To configure the settings to properly project images according to your installation circumstances.
INPUT SETTINGS	To configure the projector input settings.
DEVICE SETUP	To configure the system settings for the projector.
COMMUNICATION	Communication menu is used to configure the settings that allow the projector to communicate with other projectors or control devices.
INFORMATION	View the projector information about its status and settings. The projector information is read only.

Accessing the web control panel

When network is available, connect the projector and the computer to the same network. Use the projector address as the web URL to open the web control panel in a browser.

1. Check the projector address using the OSD menu.
   - On a wired network, select **Communication > Network Setup > IP Address**.

     Note: *Make sure DHCP is enabled.*
2. Open a web browser and type the projector address in the address bar.
3. The web page redirects to the web control panel.
4. In the Username field, type the username: admin (default) In the Password field, type the password.: Device serial number (default). Path: Menu -> Information -> Device -> Serial Number.

   Note: *It is needed to change the username and password once you have logged in. It is also advised to use a strong password.*

When network is not available, refer to “Directly connect the projector to a computer” section.

Directly connect the projector to a computer

When network is not available, connect the projector to the computer directly using a RJ-45 cable, and configure the network settings manually.

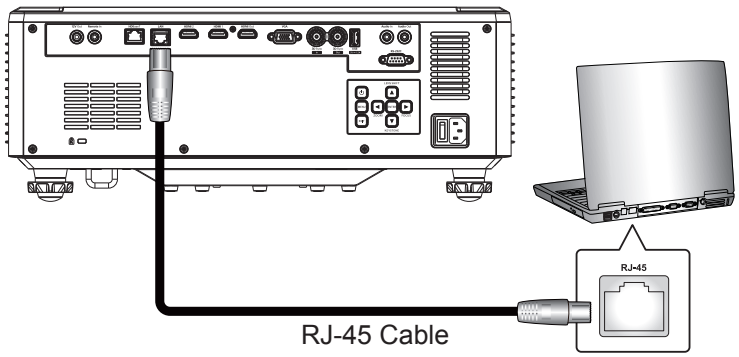

1. Assign IP address to the projector
   - From the OSD menu, select **Network Setup > DHCP**.
   - Turn off DHCP, and manually set the projector’s IP Address, Subnet Mask, and Gateway.
   - Press **Enter** to confirm the settings.
2. Assign IP address to the computer
   - Set the Default Gateway and Subnet Mask of the computer to match the projector.
   - Set the IP address of the computer to match the first three numbers of the projector.

     For example, if the projector IP address is 192.168.000.100, set the computer IP address to 192.168.000.xxx, where xxx is not 100.
3. Open a web browser and type the projector address in the address bar.
4. The web page redirects to the web control panel.

Using RS232 command by Telnet

This projector supports using RS232 commands through Telnet connection.

1. Set up a direct connection between the projector and computer. Refer to *Directly connect the projector to a computer* on page 65.
2. Disable the firewall on the computer.
3. Open the command dialogue on the computer. For Windows 7 operating system, select **Start > All Programs > Accessories > Command Prompt**.
4. Input the command “telnet ttt.xxx.yyy.zzz 23”.

   Replace “ttt.xxx.yyy.zzz” with the projector IP address.
5. Press **Enter** on the computer keyboard.

Specification for RS232 by Telnet

- Telnet: TCP
- Telnet port: 23 (contact service team for more details)
- Telnet utility: Windows “TELNET.exe” (console mode).
- Disconnection for RS232-by-Telnet control normally: Close
- Below are the limitations for using Windows Telnet utility directly after TELNET connection is ready:
  - There is less than 50 bytes for successive network payload for Telnet-Control application.
  - There is less than 26 bytes for one complete RS232 command for Telnet-Control.
  - Minimum delay for next RS232 command must be more than 200 (ms). Information menu.

Info menu

View the projector information about its status and settings. The projector information is read only.

Submenus

- Device
- System Status
- Communication
- Signal
- Firmware Version

ADDITIONAL INFORMATION

Compatible Resolutions

Digital

HDMI 2.0		
Established Timing	Standard Timing	Detail Timing
640 x 480 @ 60Hz	800 x 600 @ 120Hz	640 x 480 @ 60Hz
640 x 480 @ 67Hz	1280 x 768 @ 120Hz	720 x 480 @ 60Hz
640 x 480 @ 72Hz	1280 x 800 @ 75Hz	720 x 576 @ 50Hz
640 x 480 @ 75Hz	1280 x 1024 @ 60Hz	720 x 480i @ 60Hz
720 x 400 @ 70Hz	1360 x 765 @ 60Hz	720 x 576i @ 50Hz
720 x 400 @ 88Hz	1400 x 1050 @ 60Hz	1280 x 720 @ 50Hz
800 x 600 @ 56Hz	1600 x 1200 @ 60Hz	1280 x 720 @ 60Hz
800 x 600 @ 60Hz	1680 x 1050 @ 60Hz	1280 x 720 @ 120Hz
800 x 600 @ 72Hz		1440 x 480 @ 60Hz
800 x 600 @ 75Hz		1920 x 1080 @ 24Hz
832 x 624 @ 75Hz		1920 x 1080 @ 25Hz
1024 x 768 @ 60Hz		1920 x 1080 @ 50Hz
1024 x 768 @ 70Hz		1920 x 1080 @ 60Hz
1024 x 768 @ 75Hz		1920 x 1080 @ 120Hz
1152 x 870 @ 75Hz		1920 x 1080i @ 50Hz
1280 x 1024 @ 75Hz		1920 x 1080i @ 60Hz
		1920 x 1200 @ 59Hz
		3840 x 2160 @ 24Hz
		3840 x 2160 @ 25Hz
		3840 x 2160 @ 30Hz
		3840 x 2160 @ 50Hz
		3840 x 2160 @ 60Hz
		4096 x 2160 @ 24Hz
		4096 x 2160 @ 25Hz
		4096 x 2160 @ 30Hz
		4096 x 2160 @ 50Hz
		4096 x 2160 @ 60Hz

ADDITIONAL INFORMATION

HDMI 1.4		
Established Timing	Standard Timing	Detail Timing
640 x 480 @ 60Hz	800 x 600 @ 120Hz	640 x 480 @ 60Hz
640 x 480 @ 67Hz	1280 x 768 @ 120Hz	720 x 480 @ 60Hz
640 x 480 @ 72Hz	1280 x 800 @ 75Hz	720 x 576 @ 50Hz
640 x 480 @ 75Hz	1280 x 1024 @ 60Hz	720 x 480i @ 60Hz
720 x 400 @ 70Hz	1360 x 765 @ 60Hz	720 x 576i @ 50Hz
720 x 400 @ 88Hz	1400 x 1050 @ 60Hz	1280 x 720 @ 50Hz
800 x 600 @ 56Hz	1600 x 1200 @ 60Hz	1280 x 720 @ 60Hz
800 x 600 @ 60Hz	1680 x 1050 @ 60Hz	1440 x 480 @ 60Hz
800 x 600 @ 72Hz		1920 x 1080 @ 24Hz
800 x 600 @ 75Hz		1920 x 1080 @ 25Hz
832 x 624 @ 75Hz		1920 x 1080 @ 50Hz
1024 x 768 @ 60Hz		1920 x 1080 @ 60Hz
1024 x 768 @ 70Hz		1920 x 1080i @ 50Hz
1024 x 768 @ 75Hz		1920 x 1080i @ 60Hz
1152 x 870 @ 75Hz		1920 x 1200 @ 59Hz
1280 x 1024 @ 75Hz		

Analog

Analog		
Established Timing	Standard Timing	Detail Timing
640 x 480 @ 60Hz	1280 x 800 @ 75Hz	1920 x 1080 @ 60Hz
640 x 480 @ 67Hz	1280 x 1024 @ 60Hz	1920 x 1200 @ 59Hz
640 x 480 @ 72Hz	1360 x 765 @ 60Hz	
640 x 480 @ 75Hz	1400 x 1050 @ 60Hz	
720 x 400 @ 70Hz	1440 x 900 @ 60Hz	
720 x 400 @ 88Hz	1440 x 900 @ 75Hz	
800 x 600 @ 56Hz	1600 x 1200 @ 60Hz	
800 x 600 @ 60Hz	1680 x 1050 @ 60Hz	
800 x 600 @ 72Hz		
800 x 600 @ 75Hz		
832 x 624 @ 75Hz		
1024 x 768 @ 60Hz		
1024 x 768 @ 70Hz		
1024 x 768 @ 75Hz		
1152 x 870 @ 75Hz		
1280 x 1024 @ 75Hz		

ADDITIONAL INFORMATION

True 3D video compatibility

		Input timing	
Input Resolutions	HDMI 1.4a 3D Input	1280 x 720P @ 50Hz	Top and Bottom
		1280 x 720P @ 60Hz	Top and Bottom
		1280 x 720P @ 50Hz	Frame Packing
		1280 x 720P @ 60Hz	Frame Packing
		1920 x 1080P @ 24Hz	Top and Bottom
		1920 x 1080P @ 24Hz	Frame Packing
		1920 x 1080i @ 50Hz	Side by Side
		1920 x 1080i @ 60Hz	Side by Side
		1024 x 768 @ 120Hz	Frame Sequential
		1280 x 720 @ 120Hz	Frame Sequential

Note: *If 3D input is 1080p@24Hz, the DMD should replay with integral multiple with 3D mode.*

ADDITIONAL INFORMATION

RS232 Port Setting and Signals Connection

RS232 Port Setting

Items	Method
Communication Method	Asynchronous Communication
Baud Rate	115200
Data Bits	8 bits
Parity	None
Stop Bits	1
Flow Control	None

RS232 Signals Connection

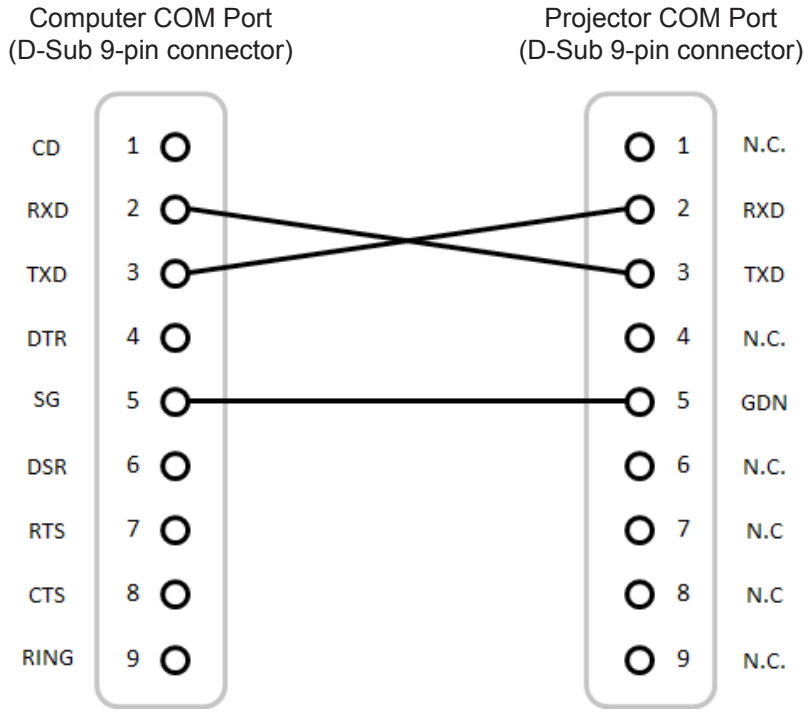

Note: *RS232 shell is grounded.*

ADDITIONAL INFORMATION

ZU920TST　イメージサイズと投写距離表

画面サイズ WUXGA (16：10)	イメージサイズ(m)		プロジェクターの距離(m)※1		オフセットHd(m)最短（ワイド）※3時 レンズ芯からイメージ下端		
	幅(W)	高さ(H)	最短（ワイド）	最長（テレ）	Hd0（基準位置）※2	Hd1（最小位置）	Hd2（最大位置）
50	1.077	0.673	0.700	0.808	-0.337	-0.707	0.034
80	1.723	1.077	1.120	1.292	-0.539	-1.131	0.054
100	2.154	1.346	1.400	1.615	-0.673	-1.414	0.067
110	2.369	1.481	1.540	1.777	-0.741	-1.555	0.074
120	2.585	1.615	1.680	1.939	-0.808	-1.696	0.081
130	2.800	1.750	1.820	2.100	-0.875	-1.838	0.087
140	3.015	1.885	1.960	2.262	-0.942	-1.979	0.094
150	3.231	2.019	2.100	2.423	-1.010	-2.120	0.101
160	3.446	2.154	2.240	2.585	-1.077	-2.262	0.108
170	3.662	2.289	2.380	2.746	-1.144	-2.403	0.114
180	3.877	2.423	2.520	2.908	-1.212	-2.544	0.121
190	4.092	2.558	2.660	3.069	-1.279	-2.686	0.128
200	4.308	2.692	2.800	3.231	-1.346	-2.827	0.135
210	4.523	2.827	2.940	3.392	-1.414	-2.968	0.141
220	4.739	2.962	3.080	3.554	-1.481	-3.110	0.148
230	4.954	3.096	3.220	3.716	-1.548	-3.251	0.155
240	5.169	3.231	3.360	3.877	-1.616	-3.393	0.162
250	5.385	3.365	3.500	4.039	-1.683	-3.534	0.168
260	5.600	3.500	3.640	4.200	-1.750	-3.675	0.175
270	5.816	3.635	3.780	4.362	-1.818	-3.817	0.182
280	6.031	3.769	3.920	4.523	-1.885	-3.958	0.188
290	6.246	3.904	4.060	4.685	-1.952	-4.099	0.195
300	6.462	4.039	4.200	4.846	-2.020	-4.241	0.202

※1　アスペクト比 WUXGA（16：10）映写時の距離です。
　　投写距離は実際の距離と誤差のある場合があります。（許容誤差±5%）
※2　（基準位置）とは、レンズキャリブレーション操作を行ったレンズ初期位置のことを指します。
※3　オフセットHdは、設置面の水平度に影響を受けるため、およその値として下さい。

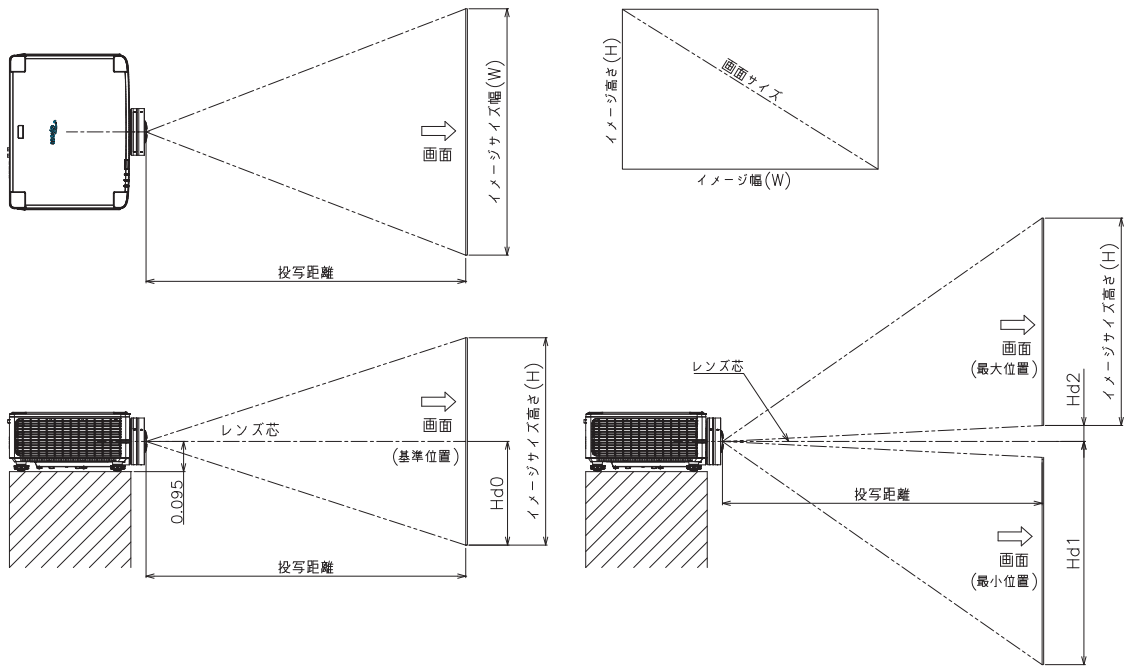

ADDITIONAL INFORMATION

Memo

ADDITIONAL INFORMATION

プロジェクターの寸法および天井取り付け

1. プロジェクターの損傷を防ぐため、必ずオーエスの天吊り用パッケージを使用して取り付けてください。
2. 他社製の天吊りキットをご利用になる場合は、プロジェクターを取り付けるねじが以下の仕様に適合していることを必ず確認してください。
   - ねじの種類：M4
   - ねじ深さ： 10 mm

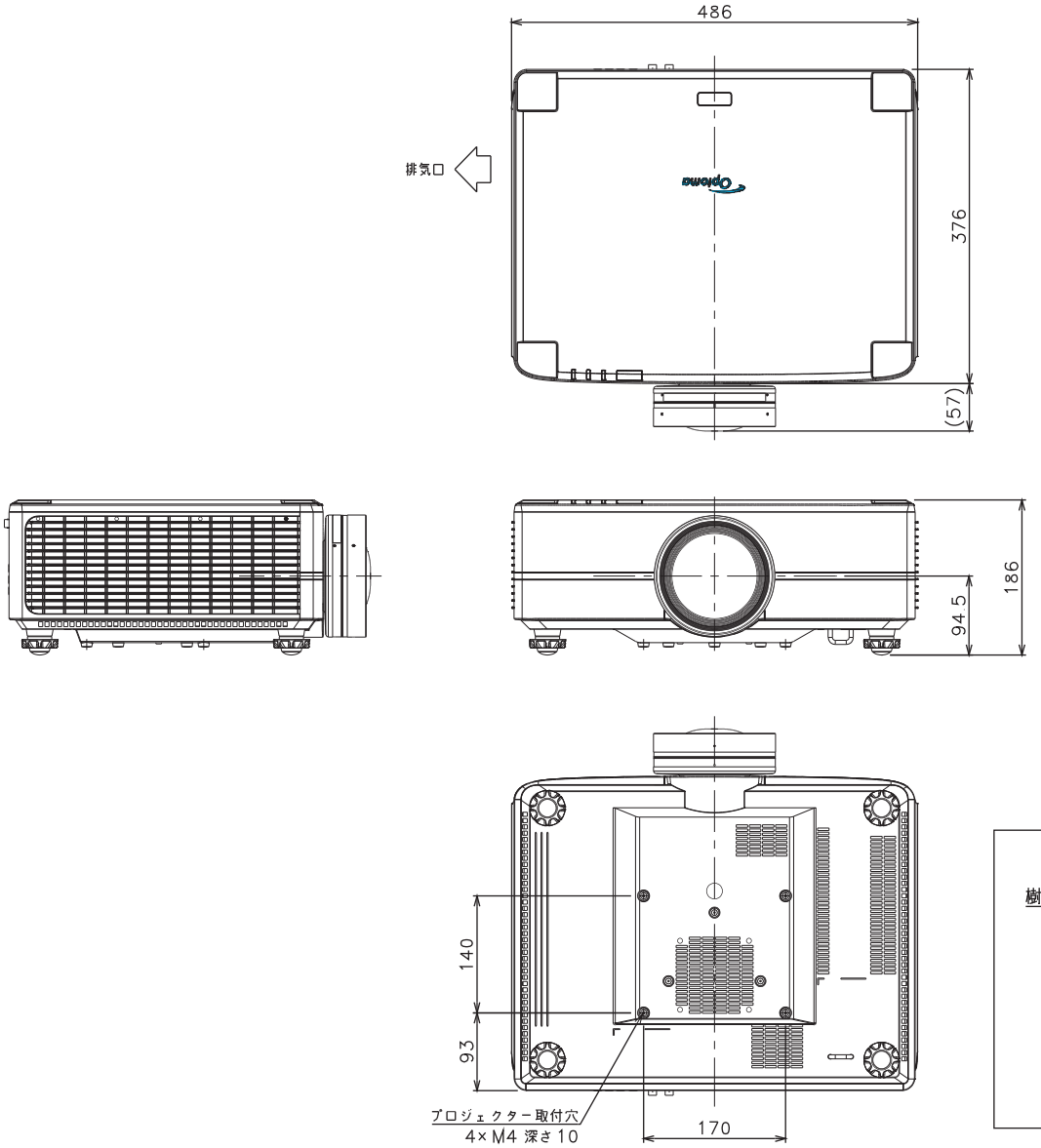

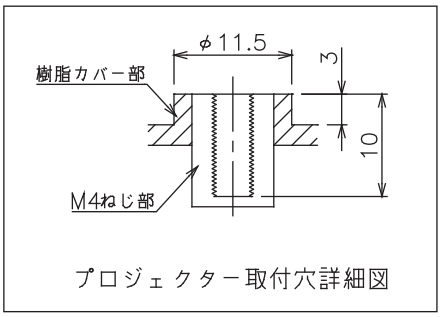

単位：mm

注: *プロジェクターを正しく取り付けていないことが原因で発生した損傷に関しましては、保証は無効になります。予めご了承ください。*

警告:

- 他社製の天吊りキットをお求めになる場合、必ずねじのサイズが正しいことをご確認ください。ねじのサイズは、天吊りプレートの厚みによって異なります。
- プロジェクターの底部と天井の間には、少なくとも 10 cm の隙間が開くようにします。
- プロジェクターは、熱源の近くに設置しないで下さい。

ADDITIONAL INFORMATION

IR remote codes

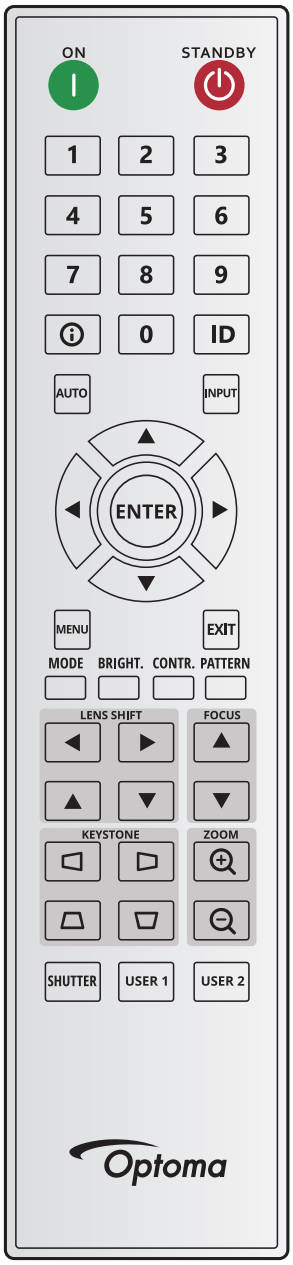

Key Legend	Key Position	Repeat Format	Address		Data		Description
			Byte 1	Byte 2	Byte 3	Byte 4	
ON (I)	1	F1	32	CD	2	FD	Press to turn on the projector.
OFF (⏻)	2	F1	32	CD	2E	D1	Press to turn off the projector.
1	3	F1	32	CD	72	8D	Use as numeric keypad number “1”.
2	4	F1	32	CD	73	8C	Use as numeric keypad number “2”.
3	5	F1	32	CD	74	8B	Use as numeric keypad number “3”.
4	6	F1	32	CD	75	8A	Use as numeric keypad number “4”.
5	7	F1	32	CD	77	88	Use as numeric keypad number “5”.
6	8	F1	32	CD	78	87	Use as numeric keypad number “6”.

ADDITIONAL INFORMATION

Key Legend	Key Position	Repeat Format	Address		Data		Description
			Byte 1	Byte 2	Byte 3	Byte 4	
7	9	F1	32	CD	79	86	Use as numeric keypad number “7”.
8	10	F1	32	CD	80	7F	Use as numeric keypad number “8”.
9	11	F1	32	CD	81	7E	Use as numeric keypad number “9”.
Info (ⓘ)	12	F1	32	CD	82	7D	Press to display source image information.
0	13	F1	32	CD	25	DA	Use as numeric keypad number “0”.
ID	14	F1	32	CD	A7	58	Press to set remote ID. Please refer to “Remote control ID setup” on page 26.
Auto	15	F1	32	CD	4	FB	Press to automatically synchronize the projector to the input source.
Input	16	F1	32	CD	18	E7	Press to select an input signal.
UP (▲)	17	F1	32	CD	0F	F0	Press to select items or make adjustments to our selection.
LEFT (◄)	18	F1	32	CD	11	EE	Press to select items or make adjustments to our selection.
Enter	19	F1	32	CD	14	EB	Press to confirm your item selection.
RIGHT (►)	20	F1	32	CD	10	EF	Press to select items or make adjustments to our selection.
DOWN (▼)	21	F1	32	CD	12	ED	Press to select items or make adjustments to our selection.
Menu	22	F1	32	CD	0E	F1	Press to display the on-screen display menus for projector.
Exit	23	F1	32	CD	2A	D5	Press to return to previous level or exit menus if at top level.
Mode	24	F1	32	CD	5	FA	Press to select the preset display mode.
Bright.	25	F1	32	CD	28	D7	Press to adjust amount of light in the image.
Contr.	26	F1	32	CD	29	D6	Press to adjust difference between dark and light.
Pattern	27	F1	32	CD	58	A7	Press to display a test pattern.
Lens Shift◄	28	F1	32	CD	41	BE	Press to adjust the position of the image horizontally.
Lens Shift ►	29	F1	32	CD	42	BD	
Focus ▲	30	F1	32	CD	86	79	Press to adjust focus to improve image clarity as desired.
Lens Shift ▲	31	F1	32	CD	34	CB	Press to adjust the position of the image vertically.
Lens Shift ▼	32	F1	32	CD	32	CD	Press to adjust the position of the image vertically.
Focus ▼	33	F1	32	CD	26	D9	Press to adjust focus to improve image clarity as desired.
Keystone ⏢	34	F1	32	CD	87	78	Press to adjust the horizontal keystone.
Keystone ⏢	35	F1	32	CD	51	AE	Press to adjust the horizontal keystone.
Zoom ⊕	36	F1	32	CD	52	AD	Press to adjust zoom to achieve a desired image size.
Keystone ⏢	37	F1	32	CD	53	AC	Press to adjust the vertical keystone.
Keystone ⏢	38	F1	32	CD	54	AB	Press to adjust the vertical keystone.
Zoom ⊖	39	F1	32	CD	55	AA	Press to adjust zoom to achieve a desired image size.
Shutter (AV Mute)	40	F1	32	CD	56	A9	Press to hide/unhide the screen picture.
User 1	41	F1	32	CD	57	A8	Press to assign user functions. Please refer to “Remote Setup” on page 69.
User 2	42	F1	32	CD	27	D8	Press to assign user functions. Please refer to “Remote Setup” on page 69.

ADDITIONAL INFORMATION

Troubleshooting

If you experience a problem with your projector, please refer to the following information. If a problem persists, please contact your local reseller or service center.

Image problems

No image appears on-screen

- Ensure all the cables and power connections are correctly and securely connected as described in the *Setup and Installation* section.
- Ensure the pins of connectors are not crooked or broken.
- Ensure that the Shutter (AV Mute) feature is not turned on.

Image is out of focus

- Press the **Focus ▲** or **Focus ▼** button on the remote control or projector keypad to adjust the focus until the image is sharp and legible.
- Make sure the projection screen is between the required distance from the projector. (Please refer to *Image size and projection distance* page *96*).

The image is stretched when displaying 16:10 DVD title

- When you play anamorphic DVD or 16:10 DVD, the projector will show the best image in 16:10 format on projector side.
- If you play 4:3 format DVD title, please change the format as 4:3 in projector OSD.
- Please setup the display format as 16:10 (wide) aspect ratio type on your DVD player.

Image is too small or too large

- Press the **Zoom** ⊕ or **Zoom** ⊖ button on the remote control or projector keypad to adjust the projected image size.
- Move the projector closer to or further from the screen.
- From the OSD menu, select **Display > Aspect Ratio** to change the aspect ratio.

Image has slanted sides:

- If possible, reposition the projector so that it is centered on the screen and below the bottom of the screen.
- Press the **Keystone** ◁/▷/△/▽ buttons on the remote control to adjust the screen shape.

Image is reversed

- From the OSD menu, select **Device Setup > Projection > Rear** to reverse the image so you can project from behind a translucent screen.

Other problems

The projector stops responding to all controls

- If possible, turn off the projector, then unplug the power cord and wait at least 20 seconds before reconnecting power.

Remote control problems

If the remote control does not work

- Check that the operating angle of the remote control is pointed within ±30° to the IR receivers on the projector.
- Make sure there are not any obstructions between the remote control and the projector. Move to within 20 meters (65.6 feet) of the projector.
- Make sure batteries are inserted correctly.
- Replace batteries if they are exhausted.

ADDITIONAL INFORMATION

LED Indicators and Lightning Messages

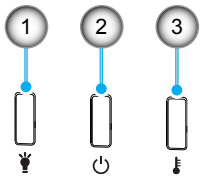

No.	Item
1.	Temp LED
2.	Power LED
3.	Light LED

Status	Light LED	Power LED		Temp LED
	Red	Red	Green	Red
Standby	N/A	Steady light	N/A	N/A
Power On	N/A	N/A	Steady light	N/A
Warning Up Start	N/A	Flashing (1 sec off / 1 sec on)	N/A	N/A
Cooling Down Start	N/A	N/A	Flashing (0.5 sec off / 0.5 sec on)	N/A
AV Mute	Flashing (1 sec off / 1 sec on)	N/A	Steady light	N/A
Error (Power Failure)	Steady light	N/A	N/A	Steady light
Error (Fan Failure)	N/A	N/A	N/A	Flashing (3 sec on / 3 sec off)
Error (Color Wheel Breakdown)	N/A	N/A	N/A	Flashing (0.5 sec off / 0.5 sec on)
Error (Over Temp)	N/A	N/A	N/A	Steady light
Error (LD Over Temp)	N/A	N/A	N/A	Steady light
Error (LD Voltage Failure)	Steady light	N/A	N/A	N/A
Error (Temp Sensor Disconnect)	Flashing (0.5 sec off / 0.5 sec on)	Flashing (0.5 sec off / 0.5 sec on)	N/A	N/A
Error (LD Failure)	Steady light	N/A	Steady light	N/A
Upgrade Process	Flashing (3 sec off / 3 sec on)	Flashing (3 sec off / 3 sec on)	Flashing (3 sec off / 3 sec on)	Flashing (3 sec off / 3 sec on)

Note: *The light off for 10min when projector into upgrade process and All LED Flashing (3 sec off/ 3 sec on)*

ADDITIONAL INFORMATION

Specifications

Optical	Description		
Lens type	1.6x	1.15x	Fixed
Throw ratio	1.25~2.0	0.65~0.75	0.63
Maximum resolution	WUXGA	WUXGA	WUXGA
Zoom & focus adjustment	Power	Power	Power
Image size (diagonal)	50”~300”	50”~1000”	40”~300”

Electrical	Description
Inputs	- HDMI 1 v2.0/4K - HDMI 2 v2.0/v1.4a - VGA-IN - 3D SYNC IN - USB Type-A x1 - AUDIO-IN 3.5mm
Outputs	- HDMI OUT - 3D SYNC OUT - AUDIO-OUT 3.5mm - 12V OUT Trigger
Control	- Wired IR - HDBaseT - RJ-45 (support web control) - RS232
Color reproduction	1073.4 Million color
Scan rate	- Horizontal scan rate: 15.38 ~ 91.15 KHz - Vertical scan rate: 24 ~ 85 Hz (120 Hz for 3D feature)
Built-in speaker	2x 10W speakers
Power requirement	100 - 240V ±10%, AC 50/60Hz
Power Consumption	- Normal mode: 520W ± 15% @ 110Vac / 505W ± 15% @ 220Vac - ECO mode: 265W ± 15% @ 110Vac / 260W ± 15% @ 220Vac
Input current	6.5A
Installation orientation	Front, Rear, Ceiling-top, and Rear-top
Dimensions (W x D x H)	1.6x lens model: - 486 x 432.5 x 176.0 mm (w/o feet) - 486 x 432.5 x 185.5 mm (with feet) 1.15x lens model: - 486 x 427.5 x 176.0 mm (w/o feet) - 486 x 427.5 x 185.5 mm (with feet) Fixed lens model: - 486 x 417.4 x 176.0 mm (w/o feet) - 486 x 417.4 x 185.5 mm (with feet)
Weight	14 ± 0.5 Kg
Environmental conditions	Operating in 5 ~ 40°C , 10% to 85% humidity (non-condensing)

Note: *All specifications are subject to change without notice.*

ADDITIONAL INFORMATION

RS232 protocol function list

Baud Rate : 115200

Data Bits: 8

Parity: None

Stop Bits: 1

Flow Control : None

UART16550 FIFO: Disable

■ Write Command

~	X	X	X	X	X		n	CR
Lead Code	Projector ID		Command			space	variable	carriage return
Prefix	00~99 (Default: 00)		000~999				0~9999	suffix

Pass:	**P**
Fail:	**F**

■ Read Command

~	X	X	X	X	X		n	CR
Lead Code	Projector ID		Command			space	variable	carriage return
Prefix	00~99 (Default: 00)		000~999				0~9999	suffix

Response Format

Pass:	**O**	**k**	**n**
			Variable

Fail:	**F**

■ System Automatically Send

I	**N**	**F**	**O**	**n**
				Variable

Note: *There is a <CR> after all ASCII commands. 0D is the HEX code for <CR> in ASCII code.*

ADDITIONAL INFORMATION

							Write Command			Read Command		
							Command			Command		
Level 1	Level 2	Level 3	Level 4	Level 5	Level 6	n value	CMD	Space	Set Para.	CMD	CMD Value	Pass
Image	Picture Mode	[None]										
		Presentation					*XX20		1	*XX123	1	Ok 0
		Bright					*XX20		2	*XX123	1	Ok 1
		Cinema					*XX20		3	*XX123	1	Ok 2
		HDR					*XX20		21	*XX123	1	Ok 3
		sRGB					*XX20		4	*XX123	1	Ok 21
		DICOM SIM.					*XX20		13	*XX123	1	Ok 4
		Blending					*XX20		19	*XX123	1	Ok 10
		3D					*XX20		9	*XX123	1	Ok 19
		2D High Speed					*XX20		18	*XX123	1	Ok 9
		User					*XX20		6,26,30~37	*XX123	1	Ok 18
	Dynamic Range	HDR	Off				*XX565		0			Ok 6,26,30~37
			Auto				*XX565		1			
		HDR Picture Mode	Bright				*XX566		0			
			Standard				*XX566		1			
			Film				*XX566		2			
			Detail				*XX566		3			
	Brightness	-					*XX46		1			
		0 ~ 100					*XX21		0~100	*XX125	1	Ok 0~100
		+					*XX46		2			
	Contrast	-					*XX47		1			
		0 ~ 100					*XX22		0~100	*XX126	1	Ok 0~100
		+					*XX47		2			
	Sharpness	1 ~ 15					*XX23		1~15			
	Gamma	Film					*XX35		1			
		Graphics					*XX35		3			
		Stanbard(2.2)					*XX35		4			
		Vivid					*XX35		21			
		3D					*XX35		9			
		Blackboard					*XX35		10			
		DICOM SIM.					*XX35		11			
		1.8					*XX35		5			
		2.0					*XX35		6			
		2.4					*XX35		12			
		2.6					*XX35		8			
	Dynamic Contrast	Dynamic Black	Off				*XX191		0			
			On				*XX191		1			
		Speed	1 ~ 15				*XX253		1~15			
		Strength	0 ~ 3				*XX254		0~3			
		Level	50% ~ 100%				*XX255		50~100			
		Extreme Black	Off				*XX218		0			
			On				*XX218		1			
		AV Mute Timer	0s ~ 10s				*XX256		0~20			
		Black Signal Level	0 ~ 5				*XX257		0~5			
	Color Settings	Color	0 ~ 100				*XX45		0~100			
		Tint	0 ~ 100				*XX44		0~100			
		Color Temperature	Warm				*XX36		4	*XX128	1	Ok 3
			Standard				*XX36		1	*XX128	1	Ok 0
			Cool				*XX36		2	*XX128	1	Ok 1
		Color Wheel Speed	2X				*XX547		1			
			3X				*XX547		2			
		White Balance	Red Gain	0 ~ 100			*XX24		0~100			
			Green Gain	0 ~ 100			*XX25		0~100			
			Blue Gain	0 ~ 100			*XX26		0~100			
			Red Offset	0 ~ 100			*XX27		0~100			
			Green Offset	0 ~ 100			*XX28		0~100			
			Blue Offset	0 ~ 100			*XX29		0~100			
		White Enhancement	0 ~ 10				*XX34		0~10			
		Color Space	Auto				*XX37		1			
			RGB (0-255)				*XX37		2			
			RGB (16-235)				*XX37		4			
			REC709				*XX37		5			
			REC601				*XX37		6			
		Color Matching	Auto Test Pattern	Off			*XX411		0			
				On			*XX411		1			
			Red	Hue		0 ~ 254	*XX327		0~254			
				Saturation		0 ~ 254	*XX333		0~254			
				Gain		0 ~ 254	*XX339		0~254			
			Green	Hue		0 ~ 254	*XX328		0~254			
				Saturation		0 ~ 254	*XX334		0~254			
				Gain		0 ~ 254	*XX340		0~254			
			Blue	Hue		0 ~ 254	*XX329		0~254			
				Saturation		0 ~ 254	*XX335		0~254			
				Gain		0 ~ 254	*XX341		0~254			
			Cyan	Hue		0 ~ 254	*XX330		0~254			
				Saturation		0 ~ 254	*XX336		0~254			
				Gain		0 ~ 254	*XX342		0~254			
			Yellow	Hue		0 ~ 254	*XX331		0~254			
				Saturation		0 ~ 254	*XX337		0~254			
				Gain		0 ~ 254	*XX343		0~254			
				Hue		0 ~ 254	*XX332		0~254			

Note: *Some commands are not supported, it depends on models.*

ADDITIONAL INFORMATION

							Write Command			Read Command						
							Command			Command						
Level 1	Level 2	Level 3	Level 4	Level 5	Level 6	n value	CMD	Space	Set Para.	CMD	CMD Value	Pass				
			Magenta	Saturation		0 ~ 254	~XX338		0~254							
				Gain		0 ~ 254	~XX344		0~254							
			White	Red		0 ~ 254	~XX345		0~254							
				Green		0 ~ 254	~XX346		0~254							
				Blue		0 ~ 254	~XX347		0~254							
			Reset				~XX215		1							
	Wall Color	Off					~XX506		0							
		BlackBoard					~XX506		1							
		Light Yellow					~XX506		7							
		Light Green					~XX506		3							
		Light Blue					~XX506		4							
		Pink					~XX506		5							
		Gray					~XX506		6							
	3D Setup	3D Mode	Off				~XX230		4							
			Active 3D				~XX230		0							
		3D Format	Auto				~XX405		0							
			Frame Packing				~XX405		7							
			Side by Side				~XX405		1							
			Top and Bottom				~XX405		2							
			Frame Sequential				~XX405		3							
		3D Tech	DLP-Link				~XX230		1							
			3D Sync				~XX230		3							
		3D-2D	3D				~XX400		0							
			L				~XX400		1							
			R				~XX400		2							
		3D Sync Out	To Emitter				~XX232		0							
			To Next Projector				~XX232		1							
		3D Invert	Off				~XX231		0							
			On				~XX231		1							
		Frame Delay	1~200				~XX233		1~500							
		Reset					~XX234		1							
	Save to User															
	Apply to User	User-Presentation					~XX20		31	~XX123	1		O	k	31	
		User-Bright					~XX20		32	~XX123	1		O	k	32	
		User-Cinema					~XX20		33	~XX123	1		O	k	33	
		User-HDR					~XX20		26	~XX123	1		O	k	26	
		User-sRGB					~XX20		34	~XX123	1		O	k	34	
		User-DICOM SIM.					~XX20		35	~XX123	1		O	k	35	
		User-Blending					~XX20		36	~XX123	1		O	k	36	
		User-3D					~XX20		6	~XX123	1		O	k	6	
		User-2D High Speed					~XX20		37	~XX123	1		O	k	37	
	Reset															
	Aspect Ratio	Auto					~XX60		7	~XX127	1		O	k	7	
		4:3					~XX60		1	~XX127	1		O	k	1	
		16:9					~XX60		2	~XX127	1		O	k	2	
		16:10					~XX60		3	~XX127	1		O	k	3	
		LBX					~XX60		5	~XX127	1		O	k	5	
		Native					~XX60		6	~XX127	1		O	k	6	
	Digital Zoom	Proportional	Off				~XX364		0							
			On				~XX364		1							
		Horizontal	50% ~ 400%				~XX504		50~400							
		Vertical	50% ~ 400%				~XX505		50~400							
		Horizontal Shift	0 ~ 100				~XX365		0~100							
		Vertical Shift	0 ~ 100				~XX366		0~100							
		Reset					~XX364		9							
	Image Shift	H. Position	0 ~ 100				~XX63		0~100							
		V. Position	0 ~ 100				~XX64		0~100							
		Reset					~XX172		1							
		Warp Control	Basic				~XX142		1							
			Advanced				~XX142		5							
			AP				~XX142		2							
		Basic Warp	Keystone	Horizontal	0 ~ 40		~XX65		0~40	~XX543	4		O	k	0~40	
				Vertical	0 ~ 40		~XX66		0~40	~XX543	3		O	k	0~40	
			Pincushion	Horizontal	0 ~ 100		~XX300		0~100	~XX543	6		O	k	0~100	
				Vertical	0 ~ 100		~XX301		0~100	~XX543	5		O	k	0~100	
			Four Corner	Top left	right +1		~XX59		1							
					left +1		~XX59		2							
					up + 1		~XX59		3							
					down +1		~XX59		4							
				Top right	right +1		~XX59		5							
					left +1		~XX59		6							
					up + 1		~XX59		7							
					down +1		~XX59		8							
				Bottom-left	right +1		~XX59		9							
					left +1		~XX59		10							
					up + 1		~XX59		11							
					down +1		~XX59		12							
				Bottom-left	right +1		~XX59		13							
					left +1		~XX59		14							
					up + 1		~XX59		15							
					down +1		~XX59		16							

Note: *Some commands are not supported, it depends on models.*

ADDITIONAL INFORMATION

							Write Command			Read Command		
							Command			Command		
Level 1	Level 2	Level 3	Level 4	Level 5	Level 6	n value	CMD	SPACE	Set Para.	CMD	CMD Value	Pass
Display	Geometric Correction	Advanced Warp	Grid Color	Green			~XX143		1			
				Magenta			~XX143		2			
				Red			~XX143		3			
				Cyan			~XX143		4			
			Grid Background	Black			~XX145		1			
				Transparent			~XX145		2			
			Warp Setting	Grid Points	2x2		~XX144		1			
					3x3		~XX144		2			
					5x5		~XX144		3			
					9x9		~XX144		4			
					17x17		~XX144		5			
				Warp Inner	Off		~XX146		0			
					On		~XX146		1			
				Warp Sharpness	0 ~ 9		~XX148		0~9			
			Blend Setting	Blend Width								
				Overlap Grid Number	4		~XX169		1			
					6		~XX169		2			
					8		~XX169		3			
					10		~XX169		4			
					12		~XX169		5			
				Gamma	1.8		~XX170		1			
					1.9		~XX170		2			
					2.0		~XX170		3			
					2.1		~XX170		4			
					2.2		~XX170		5			
					2.3		~XX170		6			
					2.4		~XX170		7			
			Black Level	Area	Bottom							
					Top							
				Enable	Off		~XX166		4/6			
					On		~XX166		3/5			
				Edit Area								
				Add Point								
				Remove Point								
				Brightness	Brightness		~XX263		1/2/3/4			
					Red	0 ~ 255	~XX281~XX285		nnn	~XX272~XX273	1	O k nnn
					Green	0 ~ 255	~XX282~XX286		nnn	~XX272~XX273	2	O k nnn
					Blue	0 ~ 255	~XX283~XX287		nnn	~XX272~XX273	3	O k nnn
					Exit							
				Red	0 ~ 255							
				Green	0 ~ 255							
				Blue	0 ~ 255							
				Reset	Bottom		~XX167		3			
					Top		~XX167		5			
					All		~XX167		1			
		Memory	Save Memory	Memory 1 ~ Memory 5			~XX141		1~5			
			Apply Memory	Memory 1 ~ Memory 5			~XX147		1~5	~XX137	1	O k 1~5
			Clear Memory				~XX174		1			
		Reset					~XX561		1			
	Edge Mask	0 ~ 10					~XX61		0~10			
	Freeze Screen	Unfreeze					~XX04		0			
		Freeze					~XX04		1			
	Test Pattern	Off					~XX195		0			
		Green Grid					~XX195		3			
		Magenta Grid					~XX195		4			
		White Grid					~XX195		1			
		White					~XX195		2			
		Black					~XX195		11			
		Red					~XX195		5			
		Green					~XX195		6			
		Blue					~XX195		7			
		Yellow					~XX195		8			
		Magenta					~XX195		9			
		Cyan					~XX195		10			
		ANSI Contrast 4x4					~XX195		14			
		Color bar					~XX195		13			
		Full screen					~XX195		15			
	PIP - PBP	Screen	Off				~XX302		0			
			PIP				~XX302		1			
			PBP				~XX302		2			
		Main Source	[no Signal]							~XX121	1	O k 0
			VGA				~XX12		5	~XX121	1	O k 2
			HDMI1				~XX12		1	~XX121	1	O k 7
			HDMI2				~XX12		15	~XX121	1	O k 8
			HDBaseT				~XX12		21	~XX121	1	O k 16
		Sub Source	[no Signal]							~XX131	1	O k 0
			VGA				~XX305		2	~XX131	1	O k 2
			HDMI1				~XX305		1	~XX131	1	O k 7
			HDMI2				~XX305		4	~XX131	1	O k 8
			HDBaseT				~XX305		10	~XX131	1	O k 16
		Swap					~XX306		1			

Note: *Some commands are not supported, it depends on models.*

ADDITIONAL INFORMATION

							Write Command			Read Command		
							Command			Command		
Level 1	Level 2	Level 3	Level 4	Level 5	Level 6	n value	CMD	SPACE	Set Para.	CMD	CMD Value	Pass
		Size	Small				~XX304		3			
			Medium				~XX304		2			
			Large				~XX304		1			
		Location	PBP, Main Left				~XX303		5			
			PBP, Main Top				~XX303		6			
			PBP, Main Right				~XX303		7			
			PBP, Main Bottom				~XX303		8			
			PIP, Bottom Right				~XX303		4			
			PIP, Bottom Left				~XX303		3			
			PIP, Top Left				~XX303		1			
			PIP, Top Right				~XX303		2			
	Reset						~XX173		1			
Input Setup	Auto Source	Off					~XX563		0			
		On					~XX563		1			
	Quick Resync	Off					~XX101		2			
		On					~XX101		3			
	Active Inputs	VGA					~XX408		5			
		HDMI1					~XX408		1			
		HDMI2					~XX408		15			
		HDBaseT					~XX408		21			
	Latency Adjustment	Normal					~XX220		0	~XX133	1	O k 0
		2D Ultra					~XX220		1	~XX133	1	O k 1
	VGA	Phase	0 ~ 100				~XX74		0~100			
		Resolution	(read only)									
	HDMI	Output	HDMI 1				~XX309		5			
			HDMI 2				~XX309		6			
		HDMI 1 EDID	1.4				~XX236		1			
			2				~XX236		2			
		HDMI 2 EDID	1.4				~XX237		1			
			2				~XX237		2			
	Reset						~XX178		1			
	Language	English					~XX70		1			
		Deutsch					~XX70		2			
		Français					~XX70		3			
		Italiano					~XX70		4			
		Español					~XX70		5			
		Português					~XX70		6			
		Polski					~XX70		7			
		Nederlands					~XX70		8			
		Norsk					~XX70		10			
		繁體中文					~XX70		13			
		简体中文					~XX70		14			
		日本語					~XX70		15			
		한국어					~XX70		16			
		Русский					~XX70		17			
		Magyar					~XX70		18			
		ไทย					~XX70		21			
	Projection	Ceiling	Auto				~XX523		3			
			On				~XX523		2			
			Off				~XX523		1			
		Rear	Off				~XX524		0			
			On				~XX524		1			
	Lens Settings	Focus	+				~XX308		1			
			-				~XX308		2			
		Zoom	+				~XX307		1			
			-				~XX307		2			
		Lens Shift	Up				~XX84		3			
			Down				~XX84		4			
			Left				~XX84		5			
			Right				~XX84		6			
		Lens Shift Memory	Save Memory	Memory 1 ~ Memory 5			~XX360		1~5			
			Apply Memory	Memory 1 ~ Memory 5			~XX359		1~5			
			Clear Memory				~XX361		1			
		Lens Calibration					~XX525		1			
		Lens Lock	Lock				~XX349		1	~XX545	4	O k 0
			Unlock				~XX349		2	~XX545	4	O k 1
		Reset					~XX175		1			
		Date and Time	(Depend on System Time)									
		Schedule Mode	Off				~XX284		0	~XX244	1	O k 0
			On				~XX284		1	~XX244	1	O k 1
		View Today	Monday Tuesday Wednesday Thursday Friday Saturday Sunday (Depend on System Time)							~XX243	2	O k 1=Monday 2=Tuesday 3=Wednesday 4=Thursday 5=Friday 6=Saturday 7=Sunday
			Schedule Enable	Off			~XX284		0~n			
				On			~XX284		1~n			
				Time	00:00 ~ 23:59	- -:- - (If event is off)	~XX471		dhhmmnnaabb			
					Off		~XX471		dhhmmnnaabb			

Note: *Some commands are not supported, it depends on models.*

ADDITIONAL INFORMATION

							Write Command			Read Command		
							Command			Command		
Level 1	Level 2	Level 3	Level 4	Level 5	Level 6	n value	CMD	SPACE	Set Para.	CMD	CMD Value	Pass
Device Setup	Schedule	Monday Tuesday Wednesday Thursday Friday Saturday Sunday	Event 01-08 Event 09-16	Function	Power Settings		~XX471		dhhmmnnaabb			
					Input Source		~XX471		dhhmmnnaabb			
					Light Source Mode		~XX471		dhhmmnnaabb			
					Shutter		~XX471		dhhmmnnaabb			
				Event	Off		~XX471		dhhmmnnaabb			
				(Function = Power Settings)	Power On		~XX471		dhhmmnnaabb			
					Eco		~XX471		dhhmmnnaabb			
					Active		~XX471		dhhmmnnaabb			
					Communication		~XX471		dhhmmnnaabb			
				(Function = Input Source)	VGA		~XX471		dhhmmnnaabb			
					HDMI1		~XX471		dhhmmnnaabb			
					HDMI2		~XX471		dhhmmnnaabb			
					HDBaseT		~XX471		dhhmmnnaabb			
				(Function = Light Source Mode)	Normal Mode		~XX471		dhhmmnnaabb			
					Eco Mode		~XX471		dhhmmnnaabb			
					Custom Brightness		~XX471		dhhmmnnaabb			
				(Function = Shutter)	Shutter On		~XX471		dhhmmnnaabb			
					Shutter Off		~XX471		dhhmmnnaabb			
				Reset			~XX472		n~nn			
			Copy Events To	Monday			~XX473		1~n			
				Tuesday			~XX473		2~n			
				Wednesday			~XX473		3~n			
				Thursday			~XX473		4~n			
				Friday			~XX473		5~n			
				Saturday			~XX473		6~n			
				Sunday			~XX473		7~n			
			Reset the Day				~XX471		9~n			
		Reset Schedule					~XX284		9			
	Date and Time	Clock Mode	Use NTP Server				~XX474		1			
			Manual				~XX474		3			
		Date	2000 ~ 2037 (Year)				~XX475		nnnn			
			01 ~ 12 (Month)				~XX476		nn			
			01 ~ 31 (Day)				~XX477		nn			
		Time	00 ~ 23 (Hour)				~XX478		nn			
			00 ~ 59 (Minute)				~XX479		nn			
		Daylight Saving Time	Off				~XX480		0			
			On				~XX480		1			
		NTP Server	time.google.com				~XX481		1			
			asia.pool.ntp.org				~XX481		2			
			europe.pool.ntp.org				~XX481		3			
			north-america.pool.ntp.org				~XX481		4			
		Time Zone	UTC+14:00				~XX482		1			
			UTC+13:00				~XX482		2			
			UTC+12:45				~XX482		3			
			UTC+12:00				~XX482		4			
			UTC+11:00				~XX482		5			
			UTC+10:30				~XX482		6			
			UTC+10:00				~XX482		7			
			UTC+09:30				~XX482		8			
			UTC+09:00				~XX482		9			
			UTC+08:45				~XX482		10			
			UTC+08:00				~XX482		11			
			UTC+07:00				~XX482		12			
			UTC+06:30				~XX482		13			
			UTC+06:00				~XX482		14			
			UTC+05:45				~XX482		15			
			UTC+05:30				~XX482		16			
			UTC+05:00				~XX482		17			
			UTC+04:30				~XX482		18			
			UTC+04:00				~XX482		19			
			UTC+03:30				~XX482		20			
			UTC+03:00				~XX482		21			
			UTC+02:00				~XX482		22			
			UTC+01:00				~XX482		23			
			UTC+00:00				~XX482		24			
			UTC-01:00				~XX482		25			
			UTC-02:00				~XX482		26			
			UTC-03:00				~XX482		27			
			UTC-03:30				~XX482		28			
			UTC-04:00				~XX482		29			
			UTC-05:00				~XX482		30			
			UTC-06:00				~XX482		31			
			UTC-07:00				~XX482		32			
			UTC-08:00				~XX482		33			
			UTC-09:00				~XX482		34			
			UTC-09:30				~XX482		35			
			UTC-10:00				~XX482		36			
			UTC-11:00				~XX482		37			
			UTC-12:00				~XX482		38			

Note: *Some commands are not supported, it depends on models.*

Note: *Some commands are not supported, it depends on models.*

ADDITIONAL INFORMATION

Level 1	Level 2	Level 3	Level 4	Level 5	Level 6	n value	Write Command			Read Command					
							Command			Command					
							CMD	Space	Set Para.	CMD	CMD Value	Pass			
		Update Interval	Hourly				~XX483		1						
			Daily				~XX483		3						
		Apply													
	Power Settings	Power Mode(Standby)	Eco				~XX114		0	~XX150	16		O	k	0
			Active				~XX114		1	~XX150	16		O	k	1
			Communication				~XX114		3	~XX150	16		O	k	3
		Signal Power On	Off				~XX113		0						
			On				~XX113		1						
		Auto Power Off	0 ~ 180 m				~XX106		0~180						
		Sleep Timer	0 ~ 16 h				~XX107		0~960						
		12V Trigger	Off				~XX192		0						
			On				~XX192		1						
		Reset					~XX177		1						
	Light Source Settings	Light Source Mode	Normal				~XX110		1						
			Eco Mode				~XX110		2						
			Custom Power				~XX110		9						
		Custom Brightness	Brightness Level	30% ~ 100%			~XX326		30~100						
			Constant Brightness	Off			~XX522		0	~XX242	1		O	k	0
				On			~XX522		1	~XX242	1		O	k	1
	Shutter	Fade-In	0.5 ~ 5s				~XX267		1~10						
		Fade-Out	0.5 ~ 5s				~XX268		1~10						
		Startup	Shutter Off				~XX269		0						
			Shutter On				~XX269		1						
	Audio	Mute	Off				~XX80		0	~XX356	1		O	k	0
			On				~XX80		1	~XX356	1		O	k	1
		Volume	0 ~ 10				~XX81		0~10						
	Security	Security	Off				~XX78		0~nnnn						
			On				~XX78		1~nnnn						
		Security Timer	Month	0 ~ 35			~XX537		00~35	~XX544	1		O	k	00~35
			Day	0 ~ 29			~XX538		00~29	~XX544	2		O	k	00~29
			Hour	0 ~ 23			~XX539		00~23	~XX544	3		O	k	00~23
		Change Password					~XX77		~MMDDHH						
							~XX406		nnnn~nnnn						
	On Screen Display	Menu Location	Top Left				~XX72		1						
			Top Right				~XX72		2						
			Center				~XX72		3						
			Bottom Left				~XX72		4						
			Bottom Right				~XX72		5						
		Menu Transparency	0 ~ 9				~XX526		0~9						
		Menu Timer	Off				~XX515		0						
			5s				~XX515		1						
			10s				~XX515		3						
			15s				~XX515		4						
			30s				~XX515		5						
			60s				~XX515		6						
		Information Hide	Off				~XX102		0						
			On				~XX102		1						
		Background	Blue				~XX104		1						
			Black				~XX104		0						
			White				~XX104		5						
			Logo				~XX104		7						
	Logo Setup	Change Logo	Default Logo				~XX82		1						
			Neutral				~XX82		3						
			User Logo				~XX82		4						
			Captured Logo				~XX82		2						
		Logo Capture					~XX83		1						
		Delete Logo	Captured Logo				~XX407		1						
			User Logo				~XX407		2						
	High Altitude	Off					~XX101		0	~XX150	22		O	k	0
		On					~XX101		1	~XX150	22		O	k	1
	User Data	Save all settings	Memory 1 ~ Memory 5				~XX258		1~5						
		Load all settings	Memory 1 ~ Memory 5				~XX259		1~5						
	System Update	Auto	Off				~XX168		0						
			On				~XX168		1						
		Auto Download	On				~XX168		3						
			Off				~XX168		4						
		Update					~XX168		9						
	Reset	Reset OSD					~XX546		1						
		Reset to default					~XX112		1						
		Reset Selective	Image				~XX509		1						
			Display				~XX173		1						
			Input				~XX178		1						
			Communication				~XX176		1						
			Setup				~XX179		1						
	Projector ID	0 ~ 99					~XX79		00~99	~XX558	1		O	k	00~99
		Remote Code	0 ~ 99				~XX350		00~99	~XX138	1		O	k	00~99
		Quick Switch Code	Off				~XX314		0	~XX138	3		O	k	0
			1 ~ 9				~XX314		0~9	~XX138	3		O	k	0~9
		IR Function	Front	Off			~XX11		4	~XX542	1		O	k	0
				On			~XX11		5	~XX542	1		O	k	1
			Top	Off			~XX11		6	~XX542	2		O	k	0
				On			~XX11		7	~XX542	2		O	k	1

Level 1	Level 2	Level 3	Level 4	Level 5	Level 6	n value	Write Command			Read Command					
							Command			Command					
							CMD	Space	Set Para.	CMD	CMD Value	Pass			
		IR Function	HDBaseT	Off			~XX11		10	~XX542	3		O	k	0
				On			~XX11		9	~XX542	3		O	k	1
		User 1	Freeze Screen				~XX117		1						
			Blank Screen				~XX117		2						
			PIP/PBP				~XX117		3						
			Aspect Ratio				~XX117		4						
			Information Hide				~XX117		5						
			Network setup				~XX117		6						
			Projector ID				~XX117		7						
			Color Matching				~XX117		8						
			Reset Selective				~XX117		9						
			Quick Switch Code				~XX117		10						
			Audio Mute				~XX117		11						
			Audio Volume				~XX117		12						
		User 2	Freeze Screen				~XX118		1						
			Blank Screen				~XX118		2						
			PIP/PBP				~XX118		3						
			Aspect Ratio				~XX118		4						
			Information Hide				~XX118		5						
			Network setup				~XX118		6						
			Projector ID				~XX118		7						
			Color Matching				~XX118		8						
			Reset Selective				~XX118		9						
			Quick Switch Code				~XX118		10						
			Audio Mute				~XX118		11						
			Audio Volume				~XX118		12						
	Network Setup	LAN Interface	RJ-45				~XX460		1						
			HDBaseT				~XX460		2						
		MAC Address	(read only)							~XX555	1		O	k	nn:nn:nn:nn:nn:nn
		Network Status	(read only) Connected							~XX87	1		O	k	1
			(read only) Disconnected							~XX87	1		O	k	0
		DHCP	Off				~XX461		0	~XX150	17		O	k	0
			On				~XX461		1	~XX150	17		O	k	1
		IP Address								~XX87	3		O	k	nn:nn:nn:nn:nn:nn
		Subnet Mask													
		Gateway													
Communication		DNS													
		Apply													
		Network Reset					~XX462		1						
	Email Notification	Email													
		Email 1	(read only)							~XX443	1		O	k	n@nnnn.nnnn.nnnn
		Email 2	(read only)							~XX443	2		O	k	n@nnnn.nnnn.nnnn
		Event													
		Fan Error					~XX463		2/1						
		Power On/Off					~XX463		4/3						
		Video Loss					~XX463		6/5						
		Laser					~XX463		8/7						
		Reset					~XX464		1						
	Control	Crestron	Off				~XX454		0						
			On				~XX454		1						
		IP Address					~XX465		1~nnn.nnn.nnn.nnn						
		IPID					~XX466		1~nnn						
		Port					~XX467		1~nnnnn						
		Crestron Setup Apply													
		PJ Link	Off				~XX456		0						
			On				~XX456		1						
		Authentication	Off				~XX468		0						
			On				~XX468		1						
		Password	(read only)				~XX470		nn...n (20 charactors)	~XX440	1		O	k	nnnnnnnnnnnnnnnnnnnn

Note: *Some commands are not supported, it depends on models.*

ADDITIONAL INFORMATION

Level 1	Level 2	Level 3	Level 4	Level 5	Level 6	n value	Write Command Command CMD	Space	Set Para.	Read Command Command CMD	CMD Value	Pass
		Service					~XX469		1~nnn.nnn.nnn.nnn			
		PJ Link Setup Apply										
		Extron	Off				~XX455		0			
			On				~XX455		1			
		AMX	Off				~XX457		0			
			On				~XX457		1			
		Telnet	Off				~XX458		0			
			On				~XX458		1			
		HTTP	Off				~XX459		0			
			On				~XX459		1			
		Reset					~XX181		1			
	Baud Rate	Serial Port In	1200							~XX153	1	O k 1200
			2400							~XX153	1	O k 2400
			4800							~XX153	1	O k 4800
			9600							~XX153	1	O k 9600
			19200							~XX153	1	O k 19200
			38400							~XX153	1	O k 38400
			57600							~XX153	1	O k 57600
			115200							~XX153	1	O k 115200
	Reset						~XX176		1			
Information	Device	Regulatory								~XX151	3	O k nnnnnnnn
		Serial Number								~XX353	1	O k nnnnnnnnnnnnnnnn
		Projection Hours								~XX150	21	O k nnnnn (nnnnn= hour digits)
	System Status	Standby Mode										
		Light Source Mode										
		Light Source Hours								~XX108	1	O k nnnnn (nnnnn= hour digits)
		Total Hours								~XX108	1	O k nnnnn (nnnnn= hour digits)
		Normal								~XX108	3	O k nnnnn (nnnnn= hour digits)
		Eco Mode								~XX108	4	O k nnnnn (nnnnn= hour digits)
		Custom Power								~XX108	7	O k nnnnn (nnnnn= hour digits)
		Ambient Temp										
		Temperature								~XX150	18	O k nnn.nn (e.g. 0k48)
	Communication	Projector ID					~XX79		00~99	~XX558	1	O k 00~99
		Remote Code					~XX350		00~99	~XX138	1	O k 00~99
		Network										
		LAN Interface										
		MAC Address										
		Network Status										
		DHCP										
		IP Address										
		Subnet Mask										
		Gateway										
		DNS										
		Control										
		Crestron										
		Extron										
		PJ Link										
		AMX										
		Telnet										
		HTTP										
	Signal	Input Signal										
		Resolution										
		Signal Format										
		Pixel Clock										
		Horz Refresh										
		Vert Refresh										
		Color Space										
		Picture Mode										
		Second Signal										
		Resolution										
		Signal Format										
		Pixel Clock										
		Horz Refresh										
		Vert Refresh										
		Color Space										
		Main Version								~XX122	1	O k nnnnnnn (FW)+
		I-SCALER Version										
		F-MCU Version										

Level 1	Level 2	Level 3	Level 4	Level 5	Level 6	n value	Write Command Command CMD	Space	Set Para.	Read Command Command CMD	CMD Value	Pass
	Firmware Version	M-MCU Version										
		A-MCU Version										
		LAN Version										
		Formatter Version										
		HDBaseT Version										
		Camera Version										

Other Items

Power Off							~XX00		0	~XX124	1	O k 0
Power On							~XX00		1	~XX124	1	O k 1
Power On with password							~XX00		1 ~nnnn			
Restart							~XX00		3			
Re-Sync							~XX01		1			
AV Mute	Off						~XX02		0	~XX355	1	O k 0
	On						~XX02		1	~XX355	1	O k 1
Freeze	Unfreeze						~XX04		0			
	Freeze						~XX04		1			
3D Sync Out	To Emitter						~XX232		0			
	To Next Projector						~XX232		1			
3D Frame Delay	1~200						~XX233		1~200			
Output 3D state	2D									~XX130	1	O k 0
	3D									~XX130	1	O k 1
System Auto Send	Standby Mode											I N F O 0
	Warming up											I N F O 1
	Cooling Down											I N F O 2
	Out of Range											I N F O 3
	lightsource Fail (LED Fail)											I N F O 4
	Thermal Switch Error											I N F O 5
	Fan Lock											I N F O 6
	Over Temperature											I N F O 7
	LightSource Hours Running Out											I N F O 8
	Cover Open											I N F O 9
	lightsource Ignite Fail											I N F O 10
	Format Board Power On Fail											I N F O 11
	Color Wheel Unexpected Stop											I N F O 12
	Over Temperature											I N F O 13
	FAN 1 Lock											I N F O 14
	FAN 2 Lock											I N F O 15
	FAN 3 Lock											I N F O 16
	FAN 4 Lock											I N F O 17
	FAN 5 Lock											I N F O 18
	LAN fail then restart											I N F O 19
	LD lower than 60%											I N F O 20
	LD NTC (1) Over Temperature											I N F O 21
	LD NTC (2) Over Temperature											I N F O 22
	High Ambient Temperature											I N F O 23
	System Ready											I N F O 24
												I N F O 25
	FAN 6 Lock											I N F O 26
	FAN 7 Lock											I N F O 27
	FAN 8 Lock											I N F O 28
	FAN 9 Lock											I N F O 29
	FAN 10 Lock											I N F O 30
	FAN 11 Lock											I N F O 31
	FAN 12 Lock											I N F O 32
	FAN 13 Lock											I N F O 33
	FAN 14 Lock											I N F O 34
System Temperature	Green/Normal									~XX155	1	O k 1
	Orange/Notice									~XX155	1	O k 2
	Red/Warning. About to trigger shutdown									~XX155	1	O k 3
Fan Status Level	Green/Normal									~XX159	1	O k 1
	Orange/Notice									~XX159	1	O k 2
	Red/Warning. About to trigger shutdown									~XX159	1	O k 3
Device Type	Projector									~XX149	1	O k 1
Model Name	Optoma WUXGA									~XX151	1	O k 5
OSD Lock	On						~XX239		1 ~nnnnnnnn	~XX229	1	O k 1
	Off						~XX239		2 ~nnnnnnnn	~XX229	1	O k 0

Note: *Some commands are not supported, it depends on models.*

ADDITIONAL INFORMATION

Level 1	Level 2	Level 3	Level 4	Level 5	Level 6	n value	Write Command Command CMD	Space	Set Para.	Read Command Command CMD	CMD Value	Pass
Regulatory Model										~XX151	4	O k DAZUKNZT DAZUKNZTST DAZUBNZT DAZUBNZTST
Software Version										~XX122	1	O k nnnnnnn (Software Version)
Fan Speed	Fan 1 Speed	0000~9999								~XX351	1	O k 0000~9999
	Fan 2 Speed	0000~9999								~XX351	2	O k 0000~9999
	Fan 3 Speed	0000~9999								~XX351	3	O k 0000~9999
	Fan 4 Speed	0000~9999								~XX351	4	O k 0000~9999
	Fan 5 Speed	0000~9999								~XX351	5	O k 0000~9999
	Fan 6 Speed	0000~9999								~XX351	6	O k 0000~9999
	Fan 7 Speed	0000~9999								~XX351	7	O k 0000~9999
	Fan 8 Speed	0000~9999								~XX351	8	O k 0000~9999
	Fan 9 Speed	0000~9999								~XX351	9	O k 0000~9999
	Fan 10 Speed	0000~9999								~XX351	10	O k 0000~9999
	Fan 11 Speed	0000~9999								~XX351	11	O k 0000~9999
	Fan 12 Speed	0000~9999								~XX351	12	O k 0000~9999
	Fan 13 Speed	0000~9999								~XX351	13	O k 0000~9999
	Fan 14 Speed	0000~9999								~XX351	10	O k 0000~9999
System Temperature										~XX352	1	O k 0000~9999
Information	Info String									~XX150	1	O k abbbbbccddddee
	Native Resolution									~XX150	2	O k nnn..nn (e.g. Ok1920x1080)
	Main Source									~XX150	3	O k nnn..nn (e.g. OkHDMI)
	- Resolution									~XX150	4	O k nnn..nn (e.g.Ok1920x1080)
	- Signal Format									~XX150	5	O k nnn..nn
	- Pixel Clock									~XX150	6	O k nnn..nn
	- Horz Refresh									~XX150	7	O k nnn..nn
	- Vert Refresh									~XX150	8	O k nnn..nn
	Sub Source									~XX150	9	O k nnn..nn
	- Resolution									~XX150	10	O k nnn..nn (e.g. Ok1920x1080)
	- Signal Format									~XX150	11	O k nnn..nn (e.g. OkHDMI)
	- Pixel Clock									~XX150	12	O k nnn..nn
	- Horz Refresh									~XX150	13	O k nnn..nn
	- Vert Refresh									~XX150	14	O k nnn..nn
	Light Source Mode									~XX150	15	O k nnn..nn
	Standby Power Mode	Active								~XX150	16	O k 1
		Eco.								~XX150	16	O k 0
		Communication								~XX150	16	O k 3
	DHCP	Off								~XX150	17	O k 0
		On								~XX150	17	O k 1
	System Temperature									~XX150	18	O k nnn..nn (e.g. Ok48)
	Refresh rate									~XX150	19	O k nnn..nn (e.g. Ok60Hz)
Source Lock	On						~XX100		0			
	Off						~XX100		1			
Display message on the OSD							~XX210		nn...n (50 charactors)			
Filter Wheel Index							~XX528		0000~9999	~XX530	1	O k 0000~9999
Phosphor Wheel Index							~XX529		0000~9999	~XX531	1	O k 0000~9999
Light Sensor Calibration							~XX552		1			

Remote Control Simulation

Power							~XX140		1			
Power Off							~XX140		2			
Up							~XX140		10			
Left							~XX140		11			
Enter (for projection MENU)							~XX140		12			
Right							~XX140		13			
Down							~XX140		14			
V Keystone +							~XX140		15			
V Keystone -							~XX140		16			
Brightness							~XX140		19			
Menu							~XX140		20			
VGA-1							~XX140		23			
AV Mute							~XX140		24			
Contrast							~XX140		28			
Zoom +							~XX140		32			
Zoom -							~XX140		33			
Focus +							~XX140		34			
Focus -							~XX140		35			
Mode							~XX140		36			
info							~XX140		40			
Re-sync							~XX140		41			
HDMI 1							~XX140		42			
HDMI 2							~XX140		43			
Source							~XX140		47			
1							~XX140		51			
2							~XX140		52			
3							~XX140		53			
4							~XX140		54			
5							~XX140		55			
6							~XX140		56			
7							~XX140		57			
8							~XX140		58			
9							~XX140		59			
0							~XX140		60			

Level 1	Level 2	Level 3	Level 4	Level 5	Level 6	n value	Write Command Command CMD	Space	Set Para.	Read Command Command CMD	CMD Value	Pass
Gamma							~XX140		61			
PIP							~XX140		63			
Lens H(left)							~XX140		64			
Lens H(Right)							~XX140		65			
Lens V(left)							~XX140		66			
Lens V(Right)							~XX140		67			
H Keystone +							~XX140		68			
H Keystone -							~XX140		69			
Hot Key (user1)(F1)							~XX140		70			
Hot Key (user2)(F2)							~XX140		71			
Pattern							~XX140		73			
Exit							~XX140		74			
Mute							~XX140		77			
Return							~XX140		82			

Note: *Some commands are not supported, it depends on models.*

Note *1
~xx150

Power	Light Source Life					Input Source		Firmware Version				Display Mode	
a	b	b	b	b	b	c	c	d	d	d	d	e	e
a=0 Power Off	Light Source Life = nnnn					cc=00 None		#	#	#	#	ee=00 None	
a=1 Power On	Calucalte by each mode formula					cc=01 DVI						ee=01 Presentation (Old: Cinema)	
						cc=02 VGA1						ee=02 Bright	
						cc=03 VGA2						ee=03 Cinema (Old: Movie/Photo)	
						cc=04 S-Video						ee=04 sRGB\Reference\Standard	
						cc=05 Video						ee=05 User(1)	
						cc=06 BNC						ee=06 User2	
						cc=07 HDMI1						ee=07 Blackboard	
						cc=08 HDMI2						ee=08 Classroom	
						cc=09 Wireless						ee=09 3D	
						cc=10 Compnent						ee=10 DICOM SIM.	
						cc=11 Flash drive						ee=11 Film	
						cc=12 Network Display(Presenter)						ee=12 Game	
						cc=13 USB Display						ee=13 Cinema	
						cc=14 HDMI3						ee=14 Vivid	
						cc=15 DisplayPort						ee=15 ISF Day	
						cc=16 HDBaseT						ee=16 ISF Night	
						cc=17 Multimedia						ee=17 ISF 3D	
												ee=18 2D high speed	
												ee=19 Blending Mode	
												ee=20 Sport	
												ee=21 HDR	
												ee=22 HDR SIM.	
												ee=23 Super Bright	
												ee=24 (Alexa auto check 2D/3D User)	

ADDITIONAL INFORMATION

仕様

Optoma	Optomaプロジェクター仕様表
商品名称	短焦点 レーザー WUXGA DLPプロジェクター
型式	ZU920TST
JANコード	4942465029829
本体カラー	ブラック
投写方式	DLP®Technology
表示素子	WUXGA（1920x1200）、0.67型 DMD（1920×※1200）
HDR信号	HDR10、HLG対応
入力解像度	取扱説明書参照
アスペクト比	16：10　※2
明るさ	8,400　ルーメン（ANSI）
コントラスト比	3,000,000：1
投写レンズ	F=2.0～2.1、 f=9.69～11.19、ズーム1.15倍（電動式）
光源	レーザー
光源寿命	30,000時間（エコモード）
投写距離	0.700m（50型） ～ 4.200m（300型）　※3
レンズシフト	電動式 ： 垂直方向 ±55%　・　水平方向 ±25%
キーストン補正	水平±30°　・　垂直±30°
コンピューター信号	UHD、FHD、HD、WUXGA、UXGA、WSXGA+、SXGA+、SXGA、WXGA、XGA、SVGA、VGA
ビデオ対応信号	NTSC M/J 3.58MHz, 4.43MHz、PAL B/D/G/H/I/M/N, 4,43MHz、 SECAM B/D/G/K/K1/L, 4.25/4.4MHz 480i/p, 576i/p, 720p(50/60Hz), 1080i(50/60Hz), 1080p(50/60Hz)
入力端子	HDMI（V2.0 HDCP2.2 最大4K HDR（3840x2160）/60fps）×2 、 VGA IN ×1、オーディオ（3.5mmジャック）×1、3D SYNC（入力）×1
出力端子	HDMI(V2.0)×1、オーディオ（3.5mmジャック）×1、USB（5V 1.5A）×1、 3D SYNC（出力）×1、トリガー（12V）×1
コントロール端子	RS-232C×1 、RJ45×1、HDBaseT ×1、有線リモコン入力（3.5mmジャック）×1
スピーカー	10W×2（ステレオ）
騒音値	27dB（エコモード）
電源	AC 100V ～ 240V （50/60Hz）
消費電力	520W（標準モード）
待機電力	0.5W以下（標準モード）
RoHS指令	適合
防塵性能	IP5X
外形寸法	486（W）×433（D）×186（H）mm （突起部を含まない）
製品質量	13.6kg
付属品	電源コード、リモコン、単4電池×2、レンズキャップ、取扱注意書（QRコード）
梱包寸法	（W）645x（D）565x（H）375mm
梱包質量	約18.4kg
推奨動作環境	気温 5～40℃、湿度 10～85%(結露無きこと)

※1 DMD™/DLP®テクノロジーの中核をなす半導体、デジタル・マイクロミラー・デバイス。半導体上に可動する極小のミラーがZU920TST（1920x1200）の場合、230万個以上敷き詰められ、1秒間に9000回というスピードで切り替えられてミラーに当たった光を反射して画像を再現します。

※2 画面の横と縦の比率です。

※3 アスペクトWUXGA（16：10）映写時の距離です。投写距離は実際の距離と誤差のある場合があります。（許容誤差±5%）

販売元　株式会社オーエスエム

連絡先：株式会社オーエス　テクニカルサポートセンター

〒557-0063　大阪市西成区南津守 6-5-53

TEL　0120-465-040　FAX　0120-380-496

（受付時間：平日 9：00 ～ 17：50　土日祝日を除く）

E-mail：info@os-worldwide.com

WEB：https://www.optoma.jp